Commercial Kitchen Equipment Parts

SCOTSMAN CU50

Scotsman CU50 service-manual

Provided by PartHubz

parthubz.com

833-700-8006 | support@parthubz.com

CU50 Service Parts

This is the illustrated parts list for the CU50 Cube Ice Machines.

When ordering a service part, always refer to the complete model number of the equipment being repaired to be sure of obtaining the correct part. Many times there are slight differences between models, and having the complete model number will aide in selecting the correct part.

The cabinet changed in November 2014 to include a service panel.

In early 2019 the compressor changed along with some of the EEPROM values in the controller represented in the C series: SCCG50MC-1 and SCCP50MC-1

Table of Contents

Door Components . . . . . Page 2
Cabinet . . . . . Page 3
Reservoir and Spray Pump . . . . . Page 4
Refrigeration . . . . . Page 5
Under Bin Parts . . . . . Page 6
Control System . . . . . Page 7
Schematic Diagram . . . . . Page 8
Wiring Diagram . . . . . Page 9

CU50 Service Parts

Door Components

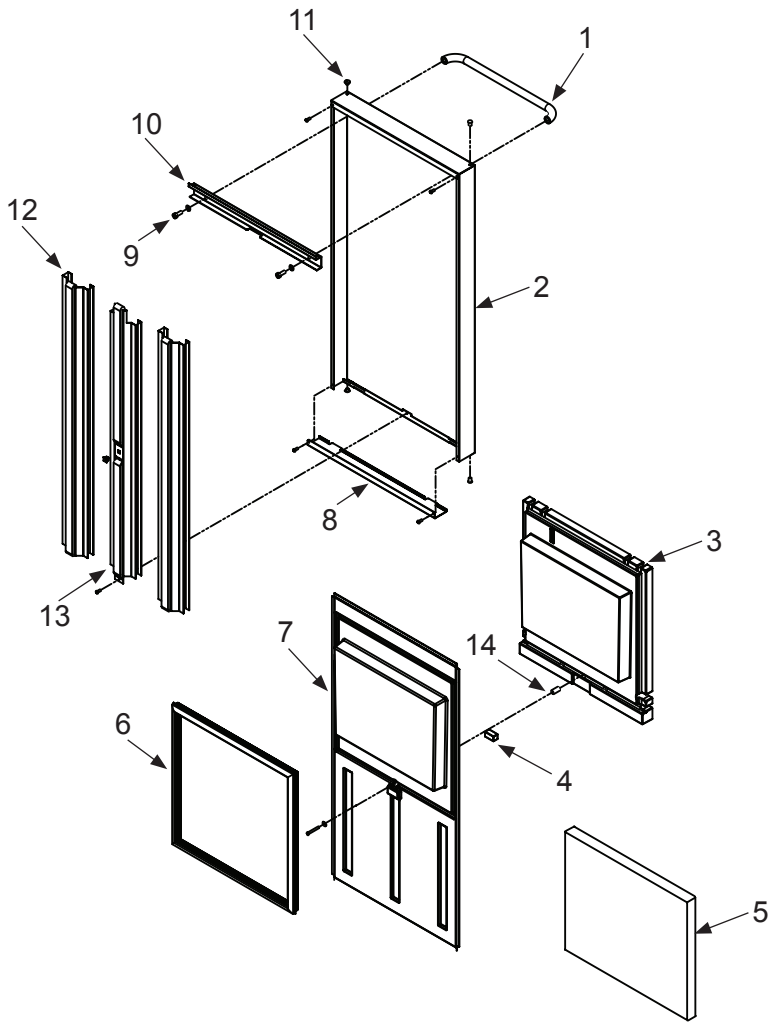

Item Number	Part Number	Description
1	02-3847-01	Handle, door
2	A39678-001	Door panel
3	02-4445-01	Insulation, upper
4	11-0587-01	Magnet, door
5	02-4570-01	Insulation, lower
6	13-0949-03	Door gasket
7	02-4569-01	Liner, door
8	A39676-001	Door bottom
9	03-3814-02	Screw, handle
10	A39675-001	Bracket, door handle
11	03-3927-01	Bushing, door hinge, same on bottom
12	A39677-001	Door support
13	A39677-002	Door support, center
14	03-3926-01	Spacer
15	A39860-021	Complete door, assembled. Includes all above parts

CU50 Service Parts

Cabinet

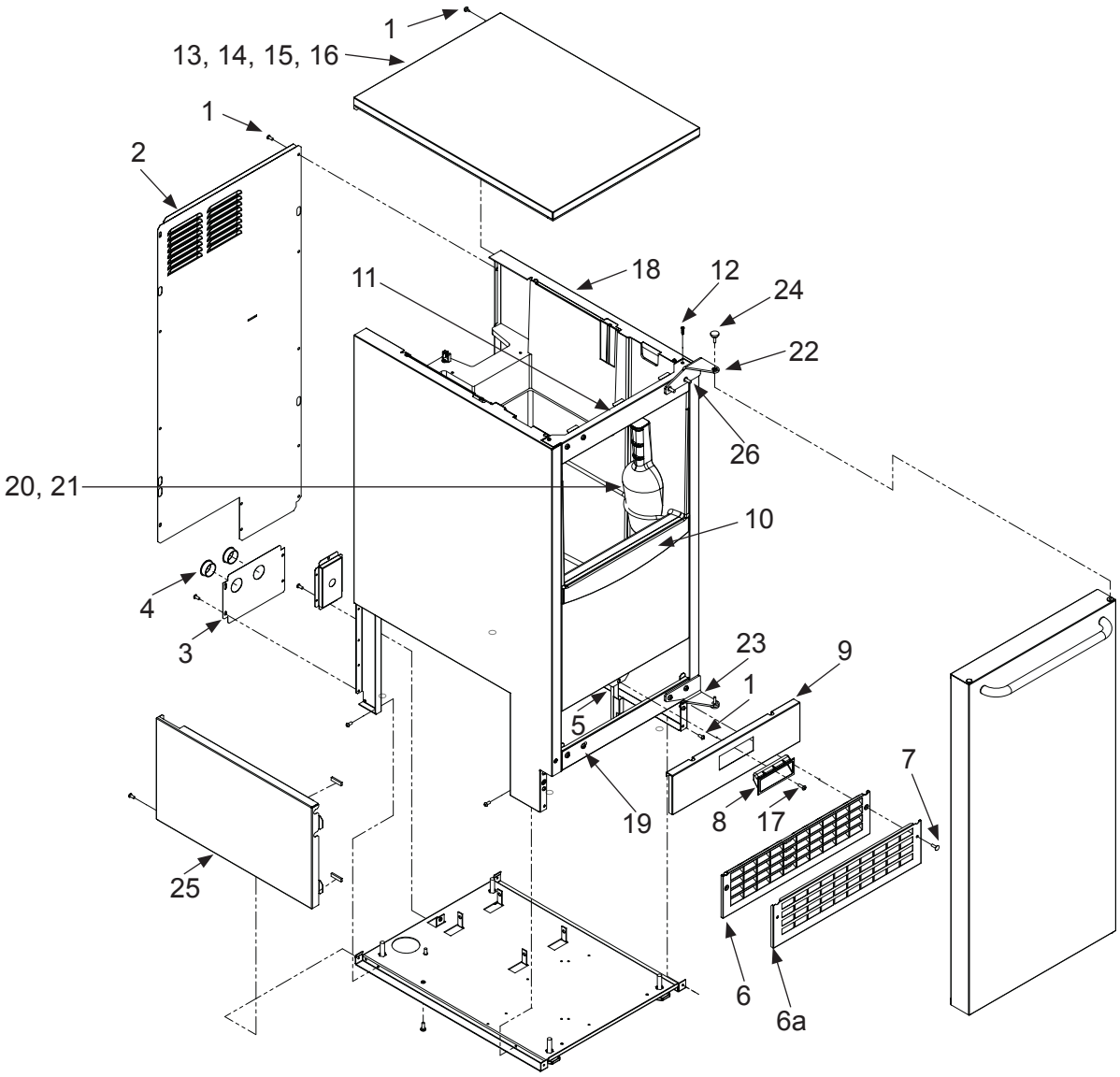

Item Number	Part Number	Description
1	03-1531-01	Screw
2	A39363-001	Back panel
3	A39389-001	Utility routing bracket
4	12-1213-11	Snap bushing
5	A39392-001	Srv panel mntg bracket
6	02-4390-01	Kickplate
6a	A39469-001	SS kickplate
7	03-1403-86	Screw
8	02-4441-01	Panel handle
9	A39381-003	Service panel, SS
10	02-4392-01	Bin edging
11	A39699-001	Top hinge panel, SS
12	03-3836-03	Screw
13	02-4438-01	Gasket - for edges
14	02-4438-02	Gasket strip - across
15	02-4426-01	Insulation pad
16	A39362-003	Top panel, SS
17	03-1403-86	Screw
18	A39618-002	SS cabinet & bin
19	A39700-001	Bottom hinge panel, SS
20	A34816-001	Bin stat bracket/scoop hldr
21	02-4391-03	Scoop
22	02-4568-02	Hinge
23	02-4568-01	Hinge
24	03-3834-01	Pin, hinge
25	A39615-001	Service panel
26	03-3818-01	Hinge mounting screw

CU50 Service Parts

Reservoir and Spray Pump

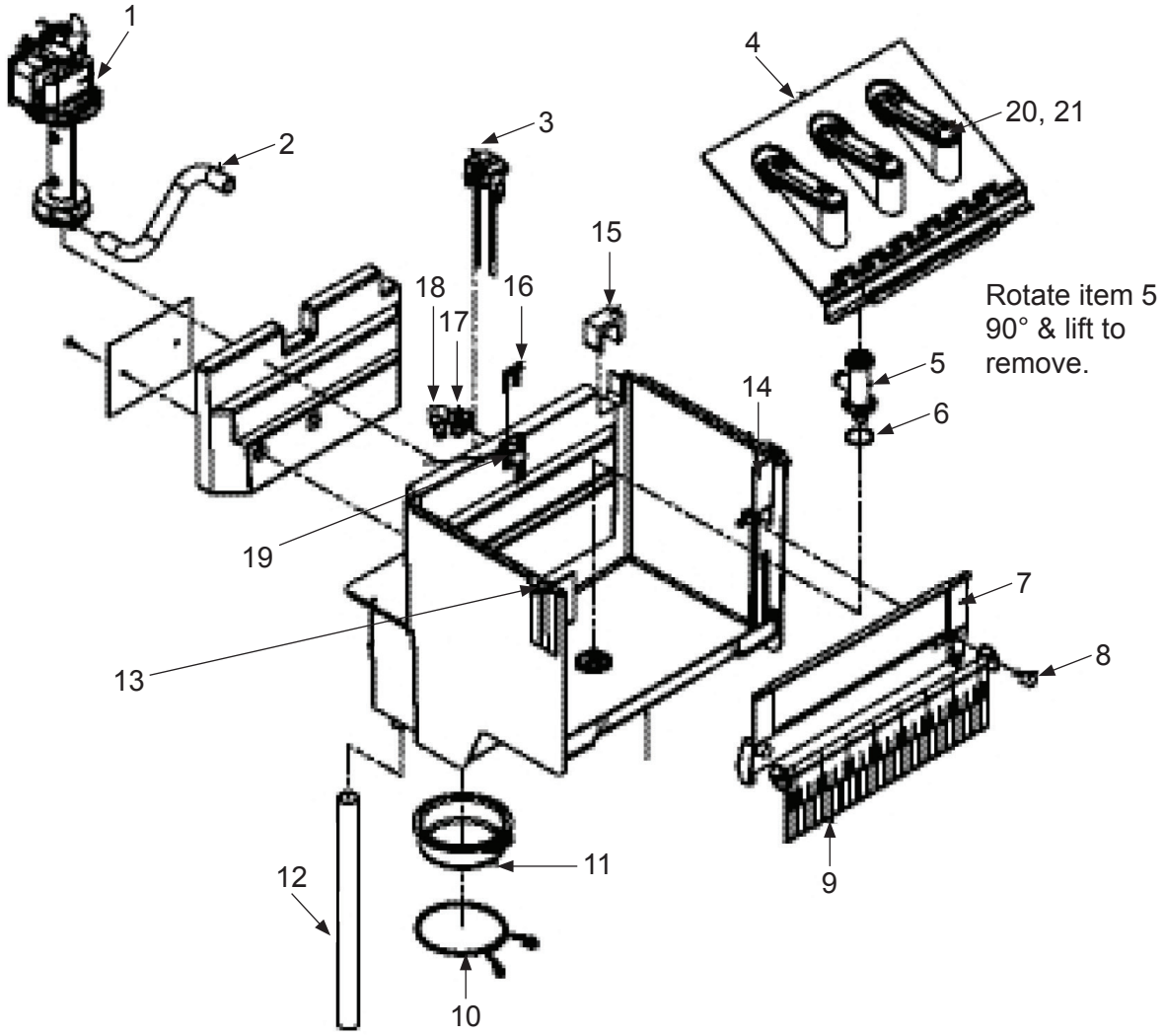

Item Number	Part Number	Description
1	12-2986-21	Water pump, incl item 1a
1a	02-1719-00	Fan blade
2	02-4379-01	Pump discharge hose
3	A39030-023	Water probe
4	02-4371-03	Spray platform
5	02-4368-01	Water Tee
6	13-0617-11	O-ring
7	02-4365-01	Front bracket
8	03-3892-01	Thumb screw
9	A39357-001	Curtain
10	02-4383-01	Clamp
11	02-4369-01	Drain cap
12	02-4428-01	Drain tube
13	02-4375-01	Evap bracket, left
14	02-4375-02	Evap bracket, right

Item Number	Part Number	Description
15	02-4475-01	Grommet
16	02-4381-03	Clip
17	13-0617-04	O-ring
18	02-4381-01	Barbed fitting
19	02-4381-02	Spout
20	02-4373-01	O-ring
21	02-4370-21	Spray nozzle, kit. Set of 3 nozzles, o-rings, screws and nuts.

CU50 Service Parts

Refrigeration

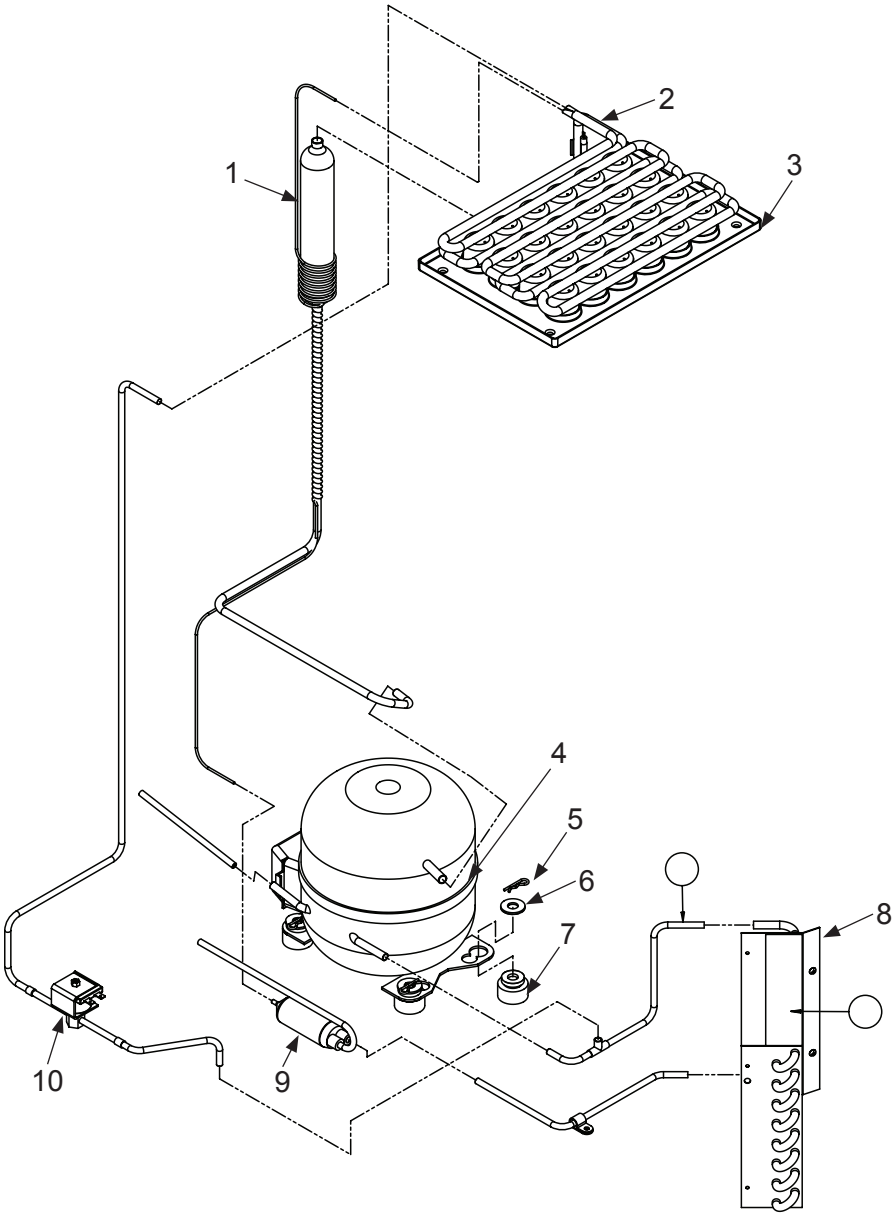

Item Number	Part Number	Description
1	A39384-001	Suction line accumulator assy
2	11-0577-01	Thermistor
	03-1711-01	Thermistor holder
3	02-4376-03	Evaporator
4	18-8939-21	Compressor* A Model Tecumseh TPB0413Y-AA
	18-8939-51	A-C Model Overload
	18-8939-52	A,B Model Relay
	18-8994-21	Compressor* C Model Tecumseh AE3425Y-AA1A
	18-8994-52	C Model Relay

Item Number	Part Number	Description
4a	18-8939-51	Overload
4b	18-8939-52	A,B Model Relay
5	03-3821-01	Clip
6	03-1407-08	Washer
7	18-4700-28	Grommet
8	18-8940-01	Condenser
9	02-4416-01	Drier
10	11-0562-21	Hot gas valve
10a	11-0562-22	HGV coil

Compressor includes overload, relay and drier

CU50 Service Parts

Under Bin Parts

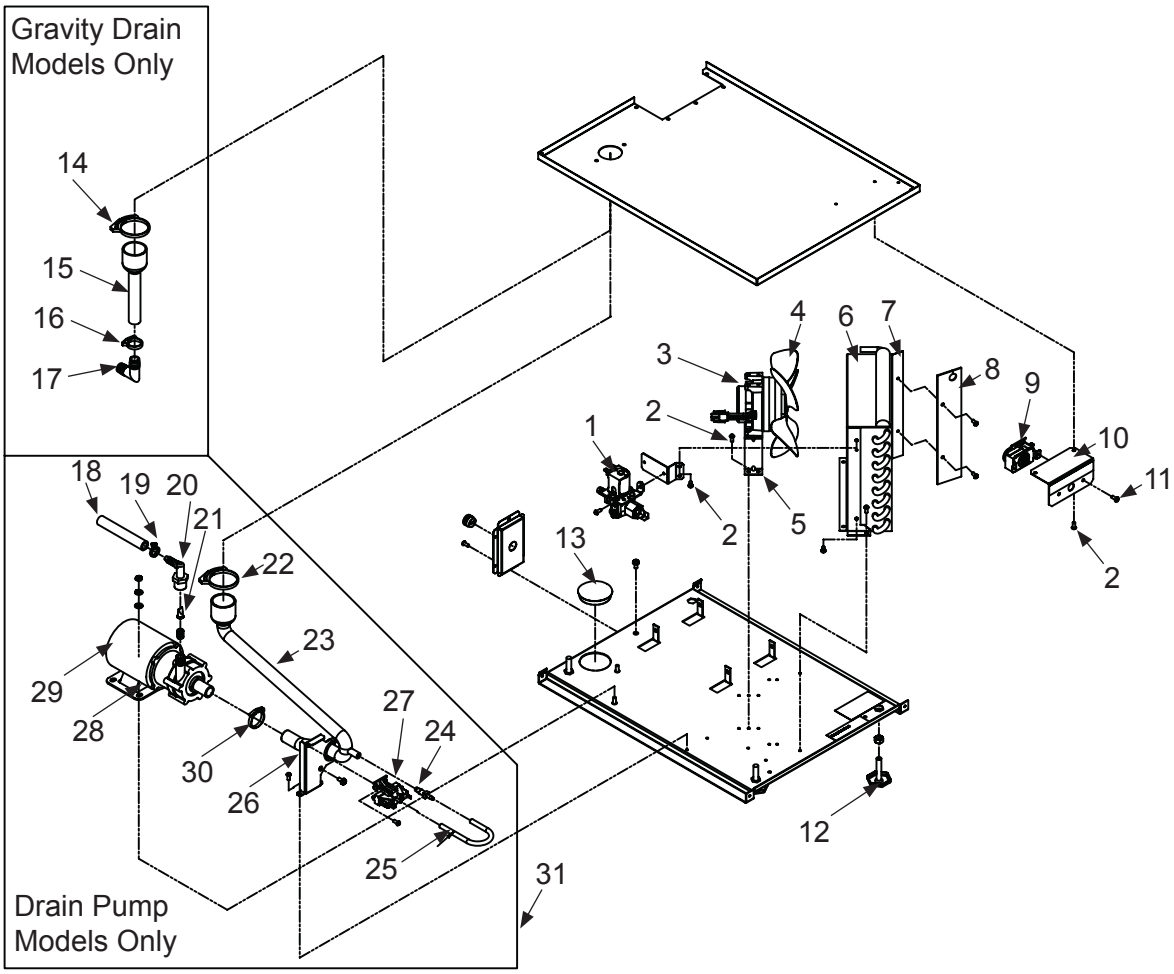

Item Number	Part Number	Description
1	12-2990-01	Inlet water sol valve
1a	05-0590-01	Full Hose Req. 4ft
2	03-1531-01	Screw
3	12-3024-01	Fan motor
4	02-4197-01	Fan blade
5	A39556-001	Fan motor bracket
6	A39460-001	Fan shroud
7	13-0909-01	Gasket, order 1 & cut to fit
8	02-4450-01	Air baffle
9	11-0617-21	Thermostat
10	A39379-001	Thermostat bracket
11	03-1403-16	Screw
12	03-1608-01	Leg leveler
12a	02-4415-01	Leg cap
13	02-1875-18	Hole plug
14	02-2814-13	Hose clamp
15	02-4412-01	Drain hose
16	02-2814-08	Hose clamp
17	16-0671-01	Elbow

Item Number	Part Number	Description
18	A37334-001	Discharge hose
19	02-0534-02	Hose clamp
20	02-3522-01	Elbow
21	02-3374-01	Check valve
22	02-2814-13	Hose clamp
23	02-4413-01	Drain tube
24	02-3406-01	Barbed connector
25	05-0591-01	Switch hose
26	A39370-001	Switch bracket
27	11-0504-01	Pressure switch
28	03-3904-01	Spring
29	12-2503-21	Pump & motor only
30	02-2814-10	Hose clamp
31	A39462-021*	Pump kit*

The complete kit shouldn't be use used for warranty purposes without an authorization number given from tech support.

Not Shown:

NS1	12-3001-01	Drain pump harness

CU50 Service Parts

Control System

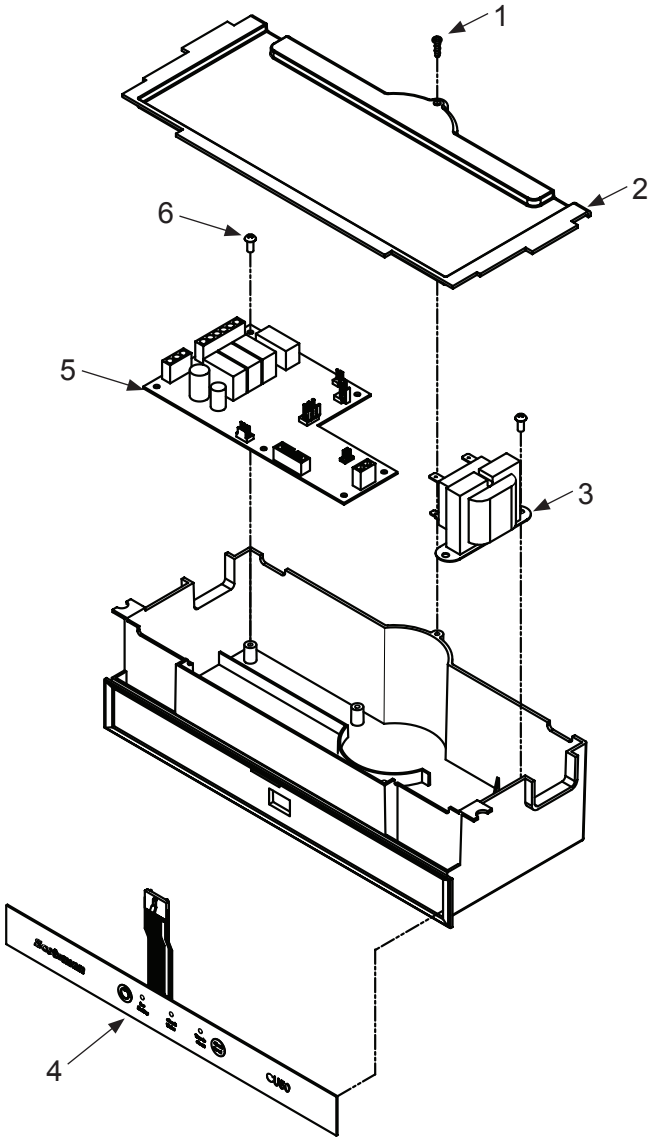

Item Number	Part Number	Description
1	03-3836-03	Screw
2	02-4386-01	Cover
3	12-2924-01	Transformer
4	11-0588-01	Switch panel
	11-0573-25	Controller A,B Model
5	11-0573-52	Controler C Model
6	03-1531-01	Screw

Item Number	Part Number	Description
Not Shown:		
NS1	12-3003-01	Bin stat harness
NS2	12-3000-02	Hi voltage harness, lower
NS3	12-3000-01	Hi voltage harness, upper
Note: If replacing the lower harness, always replace the upper one too.		
NS4	12-2992-01	Water sensor harness
NS5	12-1638-21	Power cord

CU50 Service Parts

Schematic Diagram

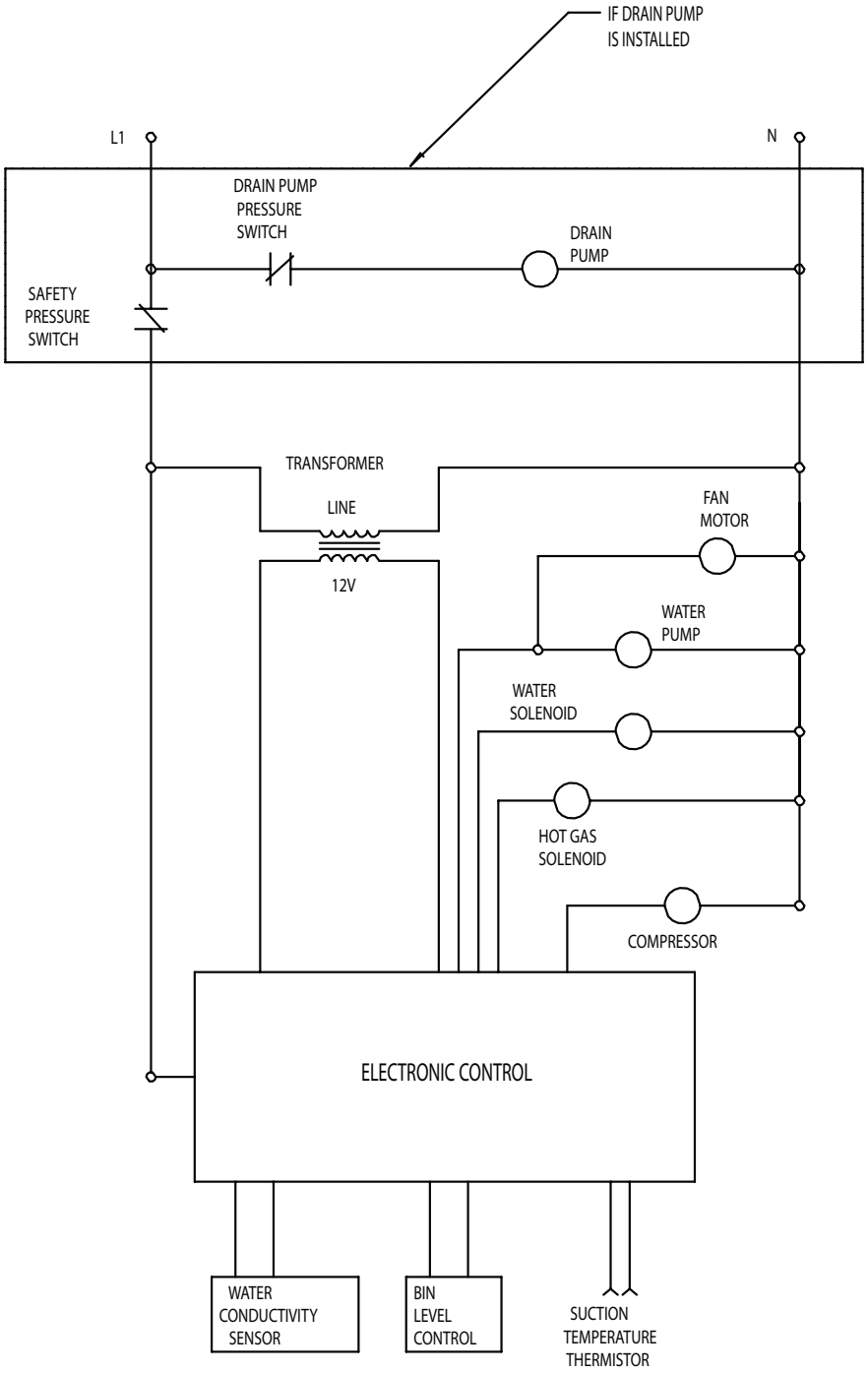

SWITCHES ON THIS UNIT
SHOWN IN FREEZE CYCLE
WITH DRAIN PUMP IN OPERATION
AND BIN DOOR CLOSED

CU50 Service Parts

Wiring Diagram

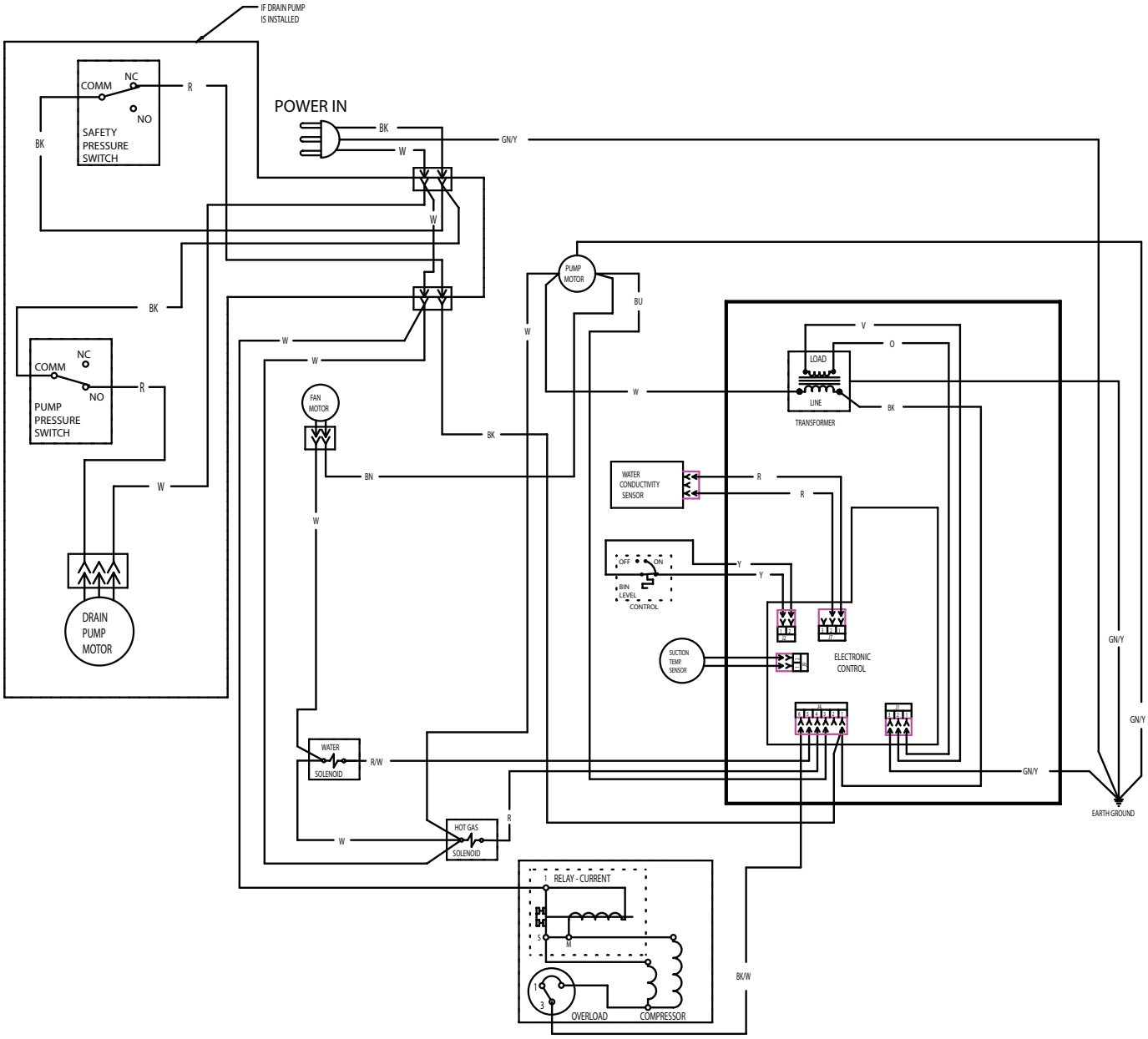

Commercial Kitchen Equipment Parts

Find more Scotsman equipment resources at

parthubz.com/equipment/scotsman

Need parts or service?

Call 833-700-8006

support@parthubz.com

parthubz.com