Commercial Kitchen Equipment Parts

SCOTSMAN DCE33

Scotsman DCE33 User Manual

Provided by PartHubz

parthubz.com

833-700-8006 | support@parthubz.com

Scotsman®
Ice Systems

User's Manual
for Residential Ice Machine
Model **DCE33**

INTRODUCTION

The Scotsman DCE33 is a restaurant type ice machine designed for home use. It produces the same high quality ice as large Scotsman commercial ice cube machines, and stores that ice in a heavily insulated storage bin.

This service manual is intended as a resource for people installing, using, and servicing the DCE33. Because it contains information on safety and maintenance, Scotsman strongly recommends that this manual be kept where it is readily available.

Table of Contents

TECHNICAL INFORMATION . . . . Page 2
CABINET DIMENSIONS . . . . Page 3
INSTALLATION . . . . Page 4
TO INSTALL: Plumbing . . . . Page 5
TO INSTALL: Plumbing . . . . Page 6
TO INSTALL: Plumbing . . . . Page 7
TO INSTALL: Plumbing . . . . Page 8
TO INSTALL: Plumbing . . . . Page 9
TO INSTALL: Add On Kits . . . . Page 10
TO INSTALL: Add On Kits . . . . Page 11
AFTER INSTALLATION . . . . Page 12
AFTER INSTALLATION - OPERATION . . . . Page 13
OPERATION . . . . Page 14
COMPONENT LOCATION . . . . Page 15
MAINTENANCE AND CLEANING . . . . Page 16
CLEANING . . . . Page 17
ADJUSTMENTS . . . . Page 18
ADJUSTMENTS . . . . Page 19
HARVEST TIME ADJUSTMENT, models DCE33A-1BD, DCE33PA-1BD, DCE33A-1SSD or DCE33PA-1SSD . . . . Page 20
SERVICE DIAGNOSIS . . . . Page 21
SERVICE DIAGNOSIS . . . . Page 22
REPAIR . . . . Page 23
REPAIR . . . . Page 24
REPAIR . . . . Page 25
REPAIR . . . . Page 26

Parts lists and wiring diagrams are located in the center of the manual.

DCE33

TECHNICAL INFORMATION

Scotsman Ice Systems are designed and manufactured with the highest regard for safety and performance. They meet or exceed the standards of U.L., and C.U.L.

Scotsman assumes no liability or responsibility of any kind for products manufactured by Scotsman that have been altered in any way, including the use of any parts and/or other components not specifically approved by Scotsman.

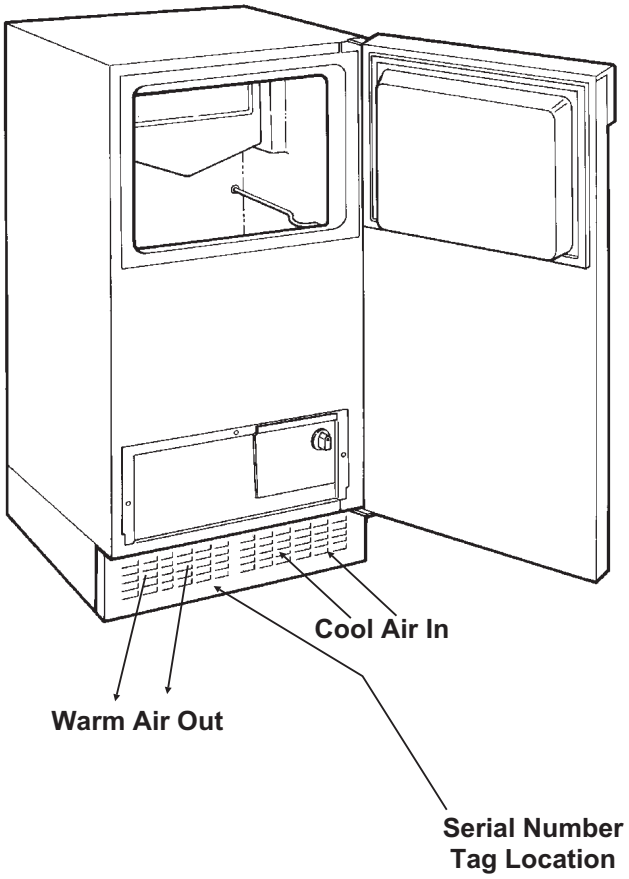

Scotsman reserves the right to make design changes and/or improvements at any time. Specifications and designs are subject to change without notice.

Model Number	Basic Electrical	Maximum Fuse Size	Cabinet Color	Drain Pump?
DCE33A-1WB	115/60/1	15 amp	White	No
DCE33PA-1WB	115/60/1	15 amp	White	Yes
DCE33A-1BB	115/60/1	15 amp	Black	No
DCE33PA-1BB	115/60/1	15 amp	Black	Yes
DCE33A-1SB	115/60/1	15 amp	Black with SS door	No
DCE33PA-1SB	115/60/1	15 amp	same	Yes
DCE33A-1WC	115/60/1	15 amp	White	No
DCE33PA-1WC	115/60/1	15 amp	White	Yes
DCE33A-1BC	115/60/1	15 amp	Black	No
DCE33PA-1BC	115/60/1	15 amp	Black	Yes
DCE33A-1SC	115/60/1	15 amp	Black with SS door	No
DCE33PA-1SC	115/60/1	15 amp	same	Yes
DCE33A-1BD	115/60/1	15 amp	Black	No
DCE33PA-1BD	115/60/1	15 amp	Black	Yes
DCE33A-1SSD	115/60/1	15 amp	Stainless Steel	No
DCE33PA-1SSD	115/60/1	15 amp	same	Yes

Add On Kits: Stainless Steel Door Panel Kit is SS33

Cabinet Extensions: KCE18-SS (Stainless Steel) KCE18-B (black)

Stainless steel door sleeve conversion kit is K-SS

Drain Pump Kit to convert gravity drain to pump drain, see page 10.

Refrigerant Charge is 5 ounces of R-134a. Compressor HP is 1/8

D series utilizes an electronic harvest timer. All others equipped with mechanical timer.

CABINET DIMENSIONS

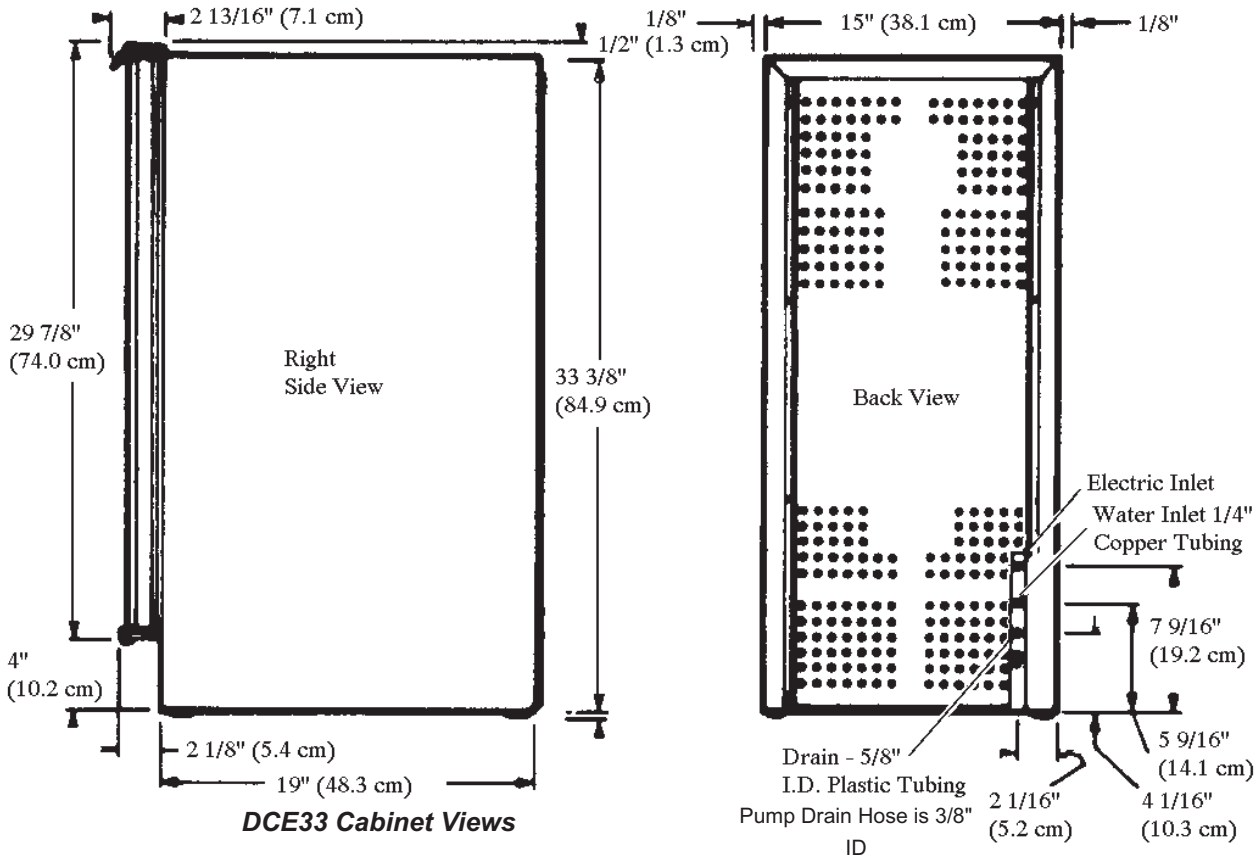

DCE33 Cabinet Views

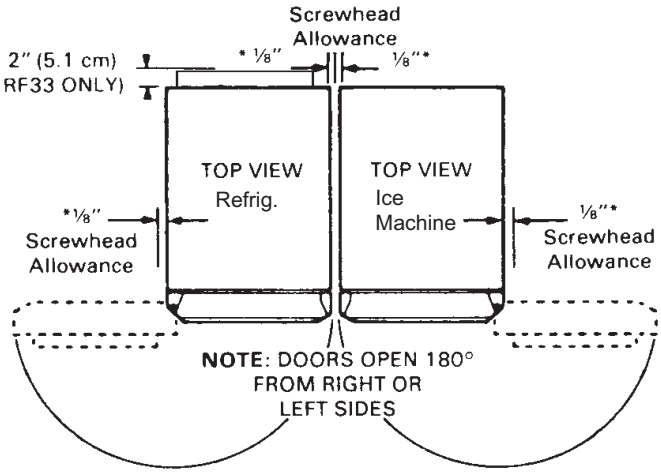

Overhead View of DCE33 and Companion Refrigerator Side By

INSTALLATION

To properly make and store ice, the DCE33 requires access to air, potable water, 115 volt electricity and a drain. The machine must be installed indoors, in a controlled environment.

Air: The ice machine uses a fan to take in room air at the front of the machine through the right side of the kick plate. It discharges warm air out the left side of the kick plate. Anything placed in front of the kick plate will restrict air flow and cause a decrease in performance and efficiency. The minimum air temperature the machine will operate in is 50^0 F., and the maximum is 100^0 F.

Water Supply: The ice machine requires a continuous supply of potable water at no less than 20 p.s.i.g. of flowing pressure. Static water pressure should not exceed 80 p.s.i.g. The minimum water temperature the machine will operate in is 40^0 F., and the maximum is 100^0 F.

Water Quality:

There is no such thing as “pure” water; all water, including potable water supplied by municipalities, contains some “impurities”. Water absorbs impurities from the air as rain and/or as it flows through the ground. Some of the impurities are solid particles, these are known as suspended solids, and a fine particle filter will remove them. Other impurities are chemically bonded to the water molecules, and cannot be filtered out, these are called dissolved solids.

Ice made by the DCE33 will have a lower mineral content than the water it was made from.

Purer water will freeze first in the ice making molds. The reason for this is that anything dissolved in water lowers the water’s freezing temperature.

This concentrates most of the impurities in the ice machine water reservoir where they may form hard deposits known as scale. The DCE33 dilutes the concentration of minerals by over-filling the reservoir during the harvest cycle (with the excess water flowing down the drain). About 3 quarts of water flow into the unit each cycle. About 1 quart of that rinses the reservoir and goes down the drain.

Some impurities will inevitably remain, and will stick to the parts in the machine, and will cause malformed ice cubes. Eventually, **built up mineral scale can shorten machine life.**

To keep the machine operating properly, these impurities or minerals will have to be regularly dissolved by an acid cleaning, using Scotsman Ice Machine Cleaner. Directions for this may be found in the section under cleaning.

In general, it is always a good idea to filter the water. A water filter, if it is of the proper type, can remove taste and odors as well as particles. Some methods of water treatment for dissolved solids include reverse osmosis, and polyphosphate feeders. A reverse osmosis system should include post treatment to satisfy the R.O. water’s “aggressiveness”.

Deionized water is not recommended.

Because water softeners exchange one mineral for another, Scotsman does not recommend their use for ice machines. Where water is very hard, softened water may result in white, mushy cubes that stick together.

Scotsman suggests, that if in doubt about the water, that a local point of use water specialist be contacted for recommendations on water treatment.

Electricity: The machine is supplied with a cord, and may be plugged into a wall outlet. The ice machine should be the only device using that circuit.

The fuse (or circuit breaker) size should be 15 amps.

Drain: There are two DCE33 models:

The DCE33A-1 is a gravity drain model that requires a drain tube that’s pitched down from the outlet at the back of the cabinet to the connection to the sanitary sewer.

The DCE33PA-1 has a built in drain pump that will pump water up to a drain point, such as a nearby sink.

TO INSTALL: Plumbing

The water supply and drain should be roughed in and ready at the point of installation. A wall outlet directly behind the ice machine will make undercounter installation easier. All electrical, water and drain connections must conform to local codes.

Installation Cautions: Although the DCE33 has been designed to be serviced in place, in some cases it may be necessary to pull the unit out for service. For that reason do not restrict access to the cabinet at the front - top and bottom.

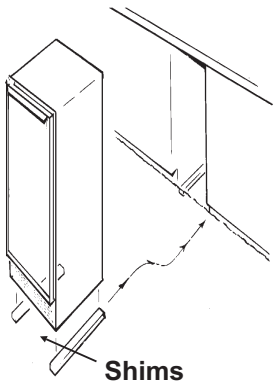

Install Unit Flush With Floor

If a floor is to be installed after the ice machine, shims the thickness of the floor should be installed under the DCE33 to keep the machine level with the floor. Also, allow 1/8" clearance on each side of the cabinet.

Installations on a slab: Use a pump (DCE33PA-1) model and pump the water to the point of drainage. Pump models will pump 1 story high.

Installations over a crawl space or basement: Either gravity drain or pump model units may be used, if there is not enough room behind the machine for a drain/waste receptacle, the drain will have to be below the floor.

ALL PLUMBING MUST MEET LOCAL CODES

Note: When installed in a corner, the door swing may be limited due to handle contact with the wall or cabinet face.

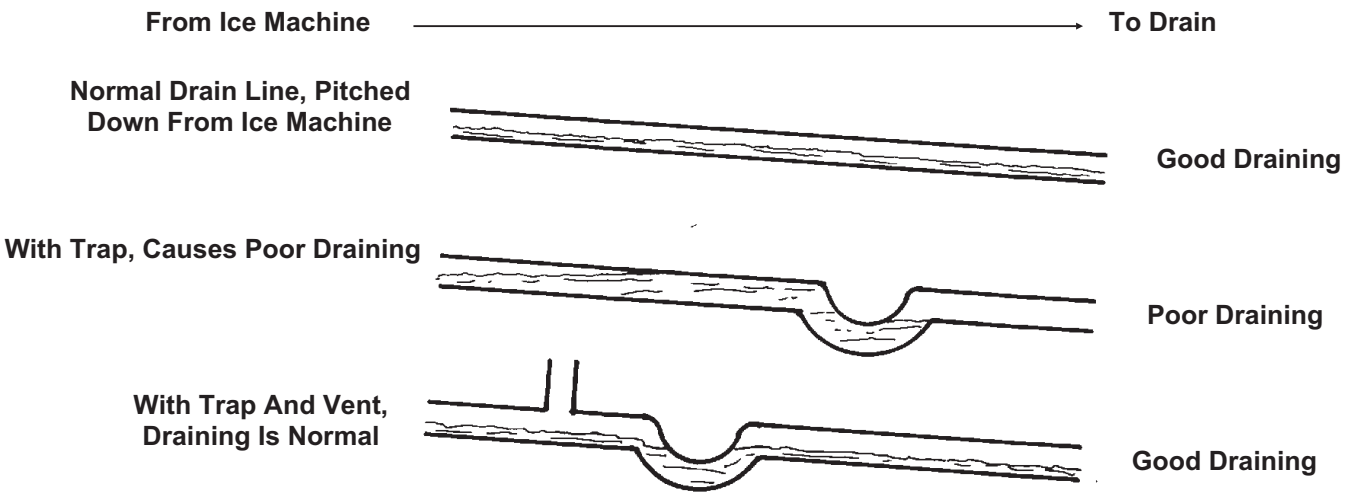

EXAMPLES OF GRAVITY DRAIN TUBE INSTALLATIONS

TO INSTALL: Plumbing

Free Standing Cabinet, Gravity Drain Model:

All horizontal runs of drain lines must have a 1/4" per foot fall. An air gap will likely be required between the ice machine drain tube and the drain/waste receptacle. A stand pipe with a trap below it would be acceptable for the drain/waste receptacle. A floor drain is also acceptable.

FOLLOW ALL LOCAL PLUMBING CODES

Poor draining will cause a high rate of ice melting in the bin.

1. Remove the kick plate and the access cover above it.

2. Route the water supply, which should be a 1/4" O.D. copper tube through the back of the cabinet to the front.

3. Install a flare nut and flare the end of the tube.

4. Flush the water line and fasten the flare nut to the male flare on the inlet water valve.

5. Route a 5/8" ID (7/8" OD) drain tube through the back panel of the machine and connect to the bin drain fitting at the bottom of the bin. Secure with hose clamps.

Be certain that the drain tube is pushed up well past the barbs on the drain fitting. If needed to ease installation, soak the drain hose in hot water just before connecting to the fitting.

6. Route the drain tube from the ice machine to the drain/waste receptacle. Note: if using a long horizontal run (more than 5') the drain should be vented at back of cabinet.

7. Turn on the water supply and check for leaks.

8. Replace the kick plate and the access cover above it.

9. Level the unit using the leg levelers.

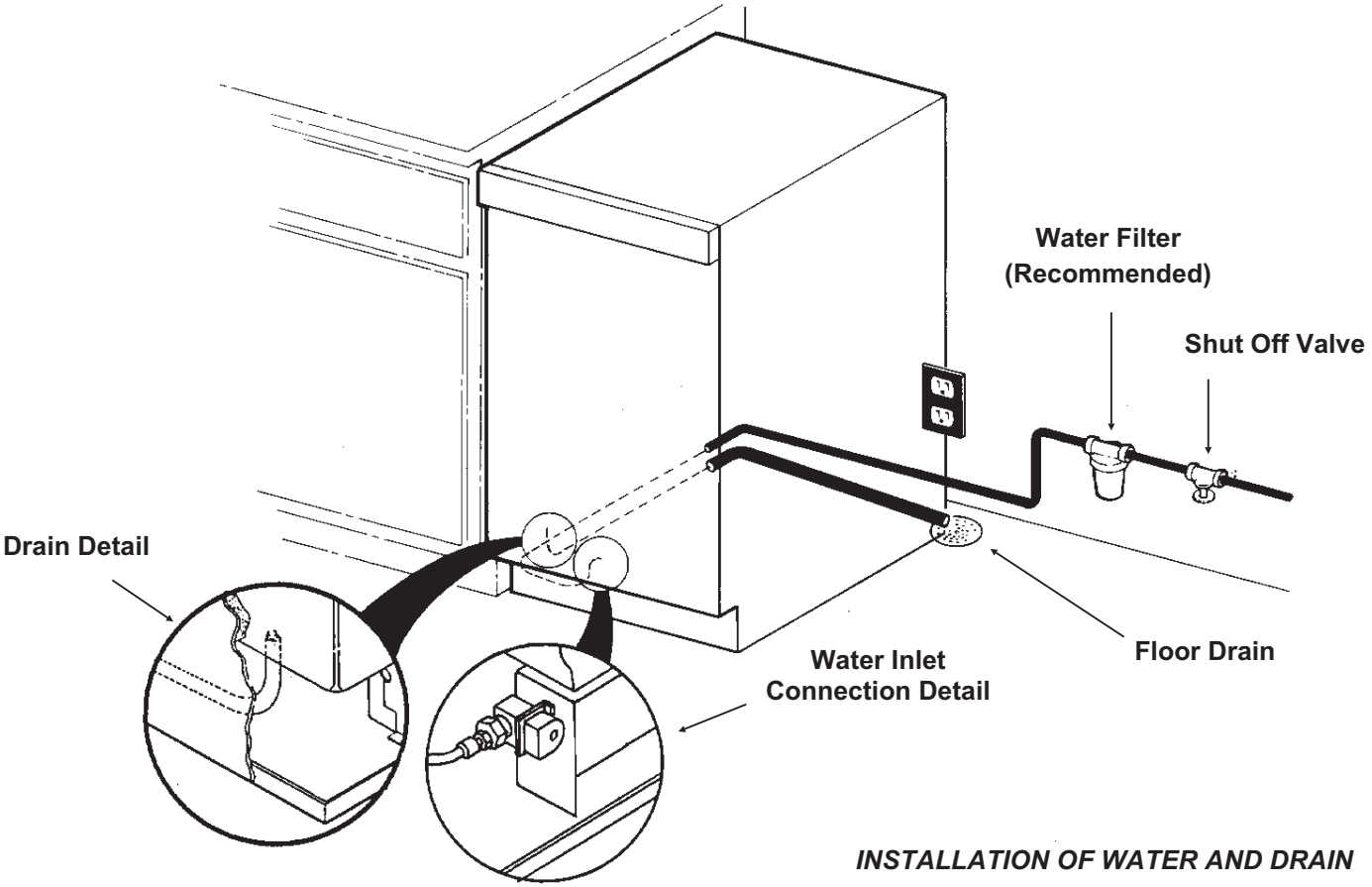

INSTALLATION OF WATER AND DRAIN

TO INSTALL: Plumbing

Free Standing Cabinet, Pump Model:

1. Remove the kickplate and control box cover.

2. Route the water supply, which should be a 1/4" O.D. copper tube through the back of the cabinet to the front.

3. Install a flare nut and flare the end of the tube.

4. Flush the water line and fasten the flare nut to the male flare on the inlet water valve.

5. Locate the coil of 3/8" ID plastic drain tubing secured to the back of the cabinet.

6. Route the plastic drain tubing to the drain point connection. Do not connect to a drain/waste line below a trap. Connect the discharge line to the drain, per local codes. An air gap will likely be required between the ice machine drain tube and the drain/waste receptacle.

7. Turn on the water and plug in the ice machine. Pour a couple quarts of water in the bin, the drain pump should start. Check for water leaks.

8. Replace the kickplate and control box cover.

9. Level the unit using the leg levelers.

ALL PLUMBING MUST MEET LOCAL CODES

THE DCE33 WILL FIT IN A SPACE 15¼" WIDE X 33¾" HIGH. THE DEPTH OF THE CABINET IS 22" TO THE FRONT EDGE OF THE HANDLE.

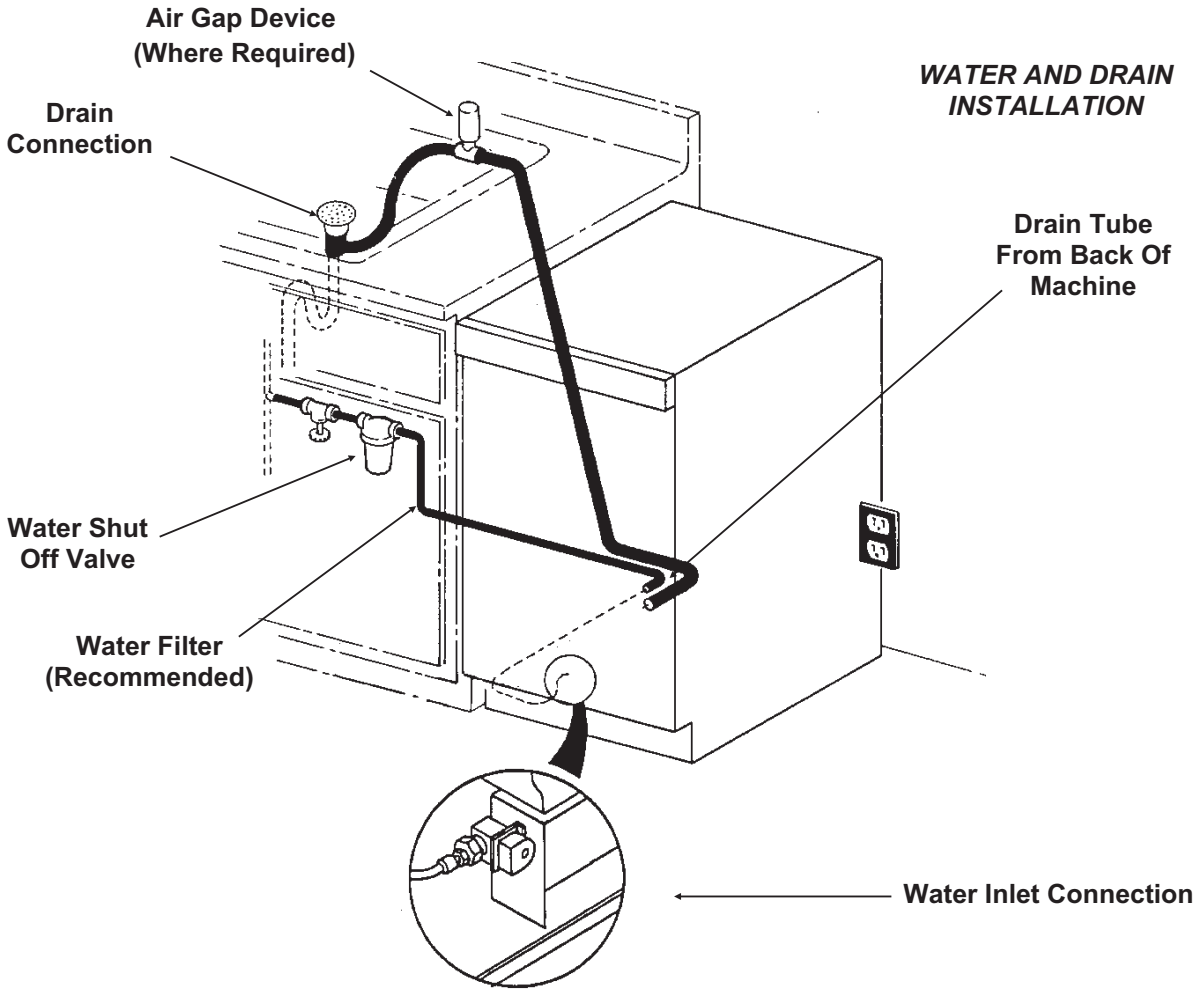

TO INSTALL: Plumbing

Built In, Gravity Drain Model:

The drain and inlet water tubes must be plumbed before connecting to the ice machine. All horizontal runs of drain lines must have a 1/4" per foot fall. An air gap will likely be required between the ice machine drain tube and the drain/waste receptacle. A stand pipe with a trap below it would be acceptable for the drain/waste receptacle.

Note: Poor draining will cause a high rate of ice melting in the bin.

1. Place ice machine in front of installed location. Adjust leg levelers to approximately correct position.

2. Remove kickplate and the access cover above it.

3. Route water inlet line, which should be a 1/4" O.D. copper tube, from wall through ice machine to the front.

4. Route drain line from wall position through ice machine. Note: if using a long horizontal run (more than 5') the drain should be vented at back of cabinet.

5. If electrical outlet for ice machine is behind the cabinet, plug in the ice machine now.

6. Push ice machine into installed position.

7. Cut off water inlet line at required length.

8. Flush water line. Place flare nut on inlet water line and flare the end of the copper tube.

9. Attach flare nut to the male flare on the inlet water valve.

10. Cut off the drain tube to the required length.

11. Route a 5/8" drain tube through the back panel of the machine and connect to the bin drain fitting at the bottom of the bin. Secure with hose clamps.

Be certain that the drain tube is pushed up well past the barbs on the drain fitting. If needed to ease installation, soak the drain hose in hot water just before connecting to the fitting.

12. Turn on the water supply and check for leaks.

13. Replace the kickplate and the access cover above it. Level as needed.

ALL PLUMBING MUST MEET LOCAL CODES

INSTALLATION OF WATER AND DRAIN

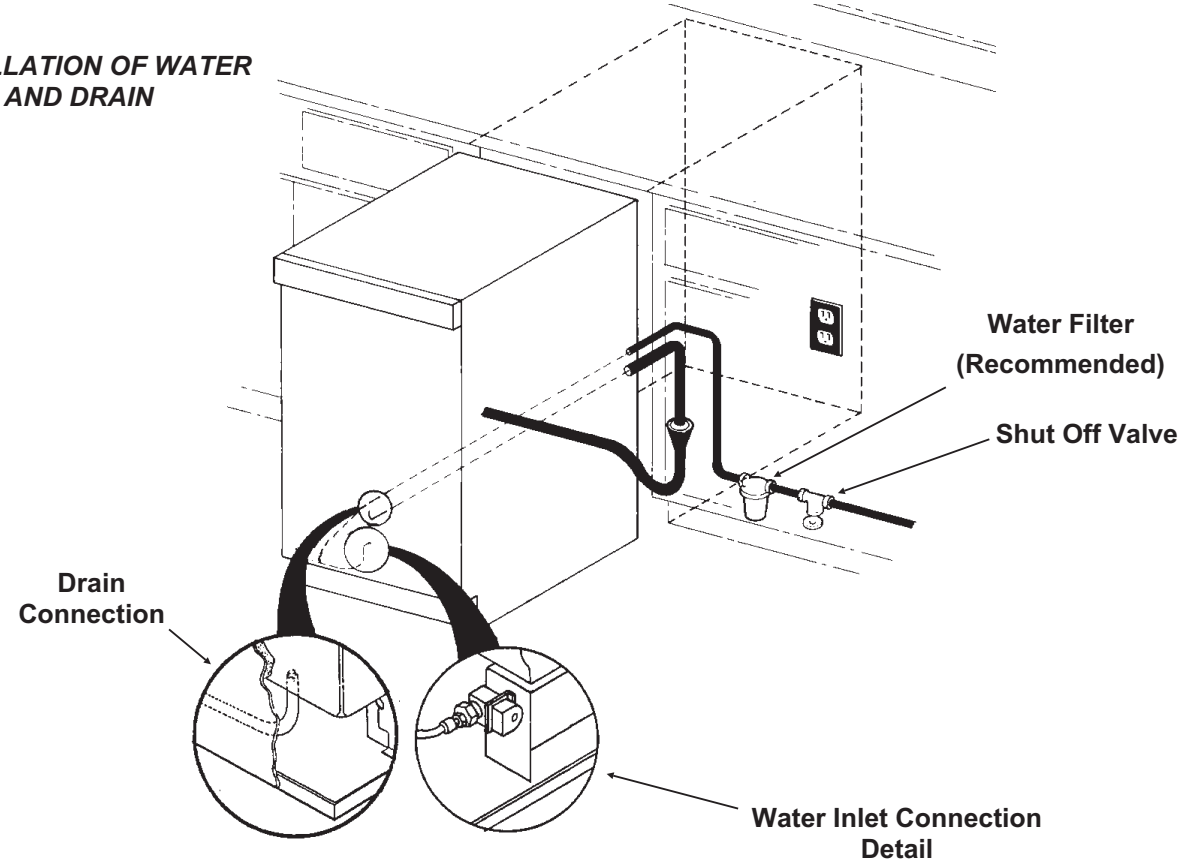

TO INSTALL: Plumbing

Built In Pump Model:

1. Place ice machine in front of installed location. Adjust leg levelers to approximately correct position.

2. Remove kickplate and control box cover.

3. Route water inlet line from wall through ice machine to the front.

4. Locate coil of 3/8" ID plastic drain tubing secured to the back of the cabinet.

5. Route plastic drain tube from back of cabinet to drain connection point.

Note: Often an air gap is required by local codes between the ice machine drain tube and the drain receptacle.

6. If electrical outlet for ice machine is behind the cabinet, plug in the ice machine now.

7. Push ice machine into installed position.

8. Cut off water inlet line at required length.

9. Flush water line. Place flare nut on inlet water line and flare the end of the copper tube.

10. Attach flare nut to the male flare on the inlet water valve.

11. Turn on the water supply, and make sure that the ice machine is plugged in and the power is on.

12. Pour a couple of quarts of water into the storage bin, the drain pump should start and pump water out. Check for leaks.

13. Replace kickplate and control box cover.

14. Level the cabinet as needed.

ALL PLUMBING MUST MEET LOCAL CODES

THE DCE33 WILL FIT IN A SPACE 15 ¼" WIDE X 33¾" HIGH.
THE DEPTH OF THE CABINET IS 22" TO THE FRONT EDGE OF THE HANDLE.

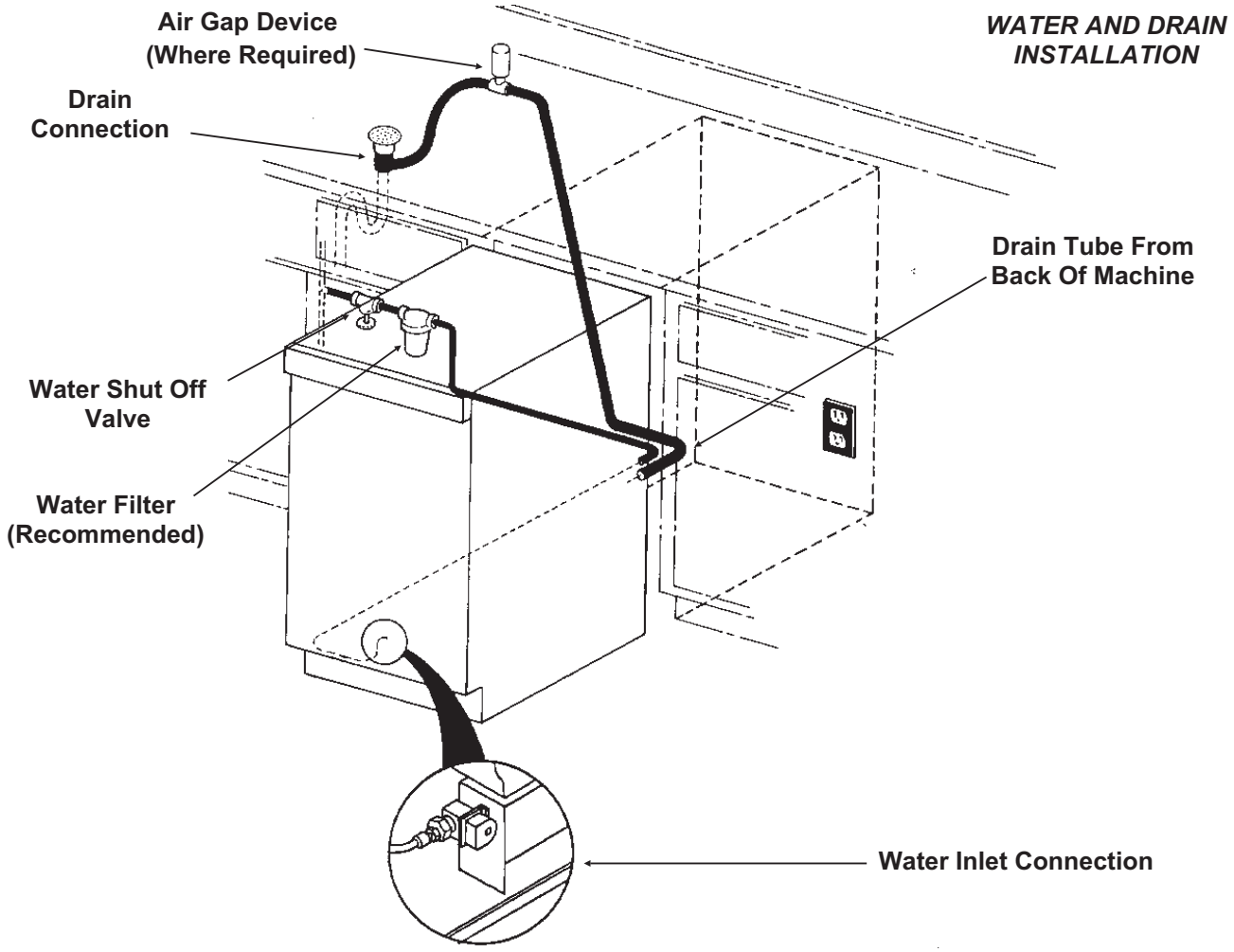

WATER AND DRAIN INSTALLATION

TO INSTALL: Add On Kits

Drain Pump Kit

The DCE33 is delivered either with or without a drain pump. Models without a drain pump drain their water by gravity. However, gravity drain models may be converted to Pump models thru the installation of a Drain Pump Kit and Drain Pump.

Two parts are required for this conversion:

Drain pump kit part number . . . . . A36892-020 (all except DCE33A-1BD or DCE33A-1SSD)
Drain pump kit part number.....A39885-001 for DCE33A-1BD or DCE33A-1SSD
Drain pump part number 12-2503-21

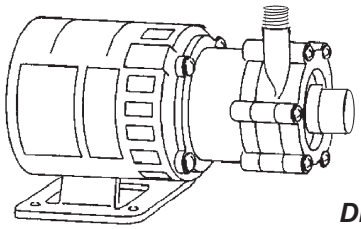

Drain Pump

Specific step-by-step instructions are included with the kit.

TO INSTALL: Add On Kits

Door Kit: The door may be modified to accept a decorator door panel.

Customizing Door Panel:

A custom door panel may be installed in front of the standard one. Any panel 14 ¾" wide, 28 15/16" high and ¼" thick or less at the edges may be used as a decorator panel. Examples of decorator panels include wood to match the adjacent cabinets; metal of different colors to match nearby appliances; or just about any material that will fit. Scotsman has a stainless steel panel available to fit this machine, the kit number is SS33.

If the material is less than 1/4" thick, the space between the new panel and the original may be filled with cardboard.

1. Remove single screw and the left hand hinge filler plate from the top of the door.

2. Remove two screws from the top of the door and lift off the door handle.

3. Open the door slightly, about one-third or so; then, remove the front screw holding the hinge to the door.

4. Loosen the rear screw of the hinge just enough to allow the door to sag or move forward. This will allow access to the top of the channels at the right and left edges of the door.

5. From the top of the door, insert the decorator panel (pre-cut) evenly into the channels; carefully slide the panel all the way down until the panel is fully into the bottom channel.

6. Check that the panel is the in all the way and does not protrude past the top edge of the door.

7. Push the top hinge corner of the door IN to align screw hole in the hinge with the screw hole in the door. Install the screw previously removed. Tighten the other screw.

8. Replace the door handle and filler plate; secure with screws previously removed.

Parts Involved in Customizing Door Panel

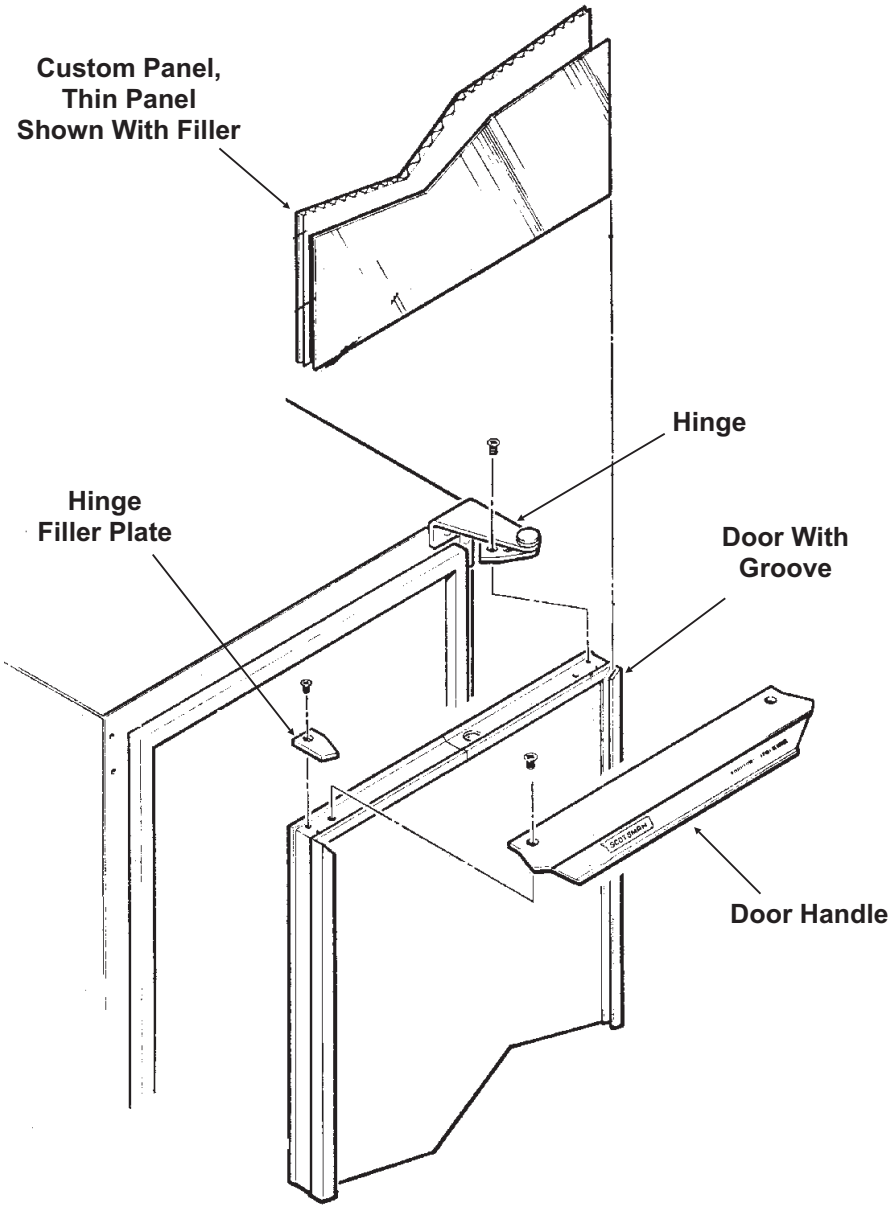

Reversing Door Swing:

The hinged side of the door may be reversed to the other side if desired:

The DCE33 was shipped with the door hinged at the right. The door and hinges are designed for placing the hinges on either the right or the left side of the cabinet. Moving the hinges to the left allows the door to pivot from the left side.

Note: There is a part, packed with the machine, that is required for this procedure.

1. Open the door and remove the three screws holding the lower hinge to the cabinet.

2. With the door open enough to see both screws at the top door hinge, remove the two screws. The door is now free of the cabinet.

3. Remove the single screw and the hinge filler plate from the top of the door.

4. Install the other filler plate (shipped inside refrigerator compartment) onto the top corner of the door where the hinge was.

5. Remove the three plastic plugs from the top front corner where the hinge will mount.

6. Remove the three plastic plugs from the lower front corner where that hinge will mount.

7. Remove the three screws holding the top hinge to the cabinet. Remove that hinge from the top and, flipping it upside down, install it onto the bottom of the door, on the opposite side using the original screws.

8. Remove the hinge assembly from the bottom of the door, and flip it upside down; secure it to the cabinet at the opposite side top position with the original screws.

9. Hold the door up to the cabinet. Secure the door to the top hinge with the original screws.

10. Secure the bottom hinge to the cabinet with the original screws.

11. Place the plastic plugs removed earlier into the empty holes.

12. Check operation of the door by opening and closing it.

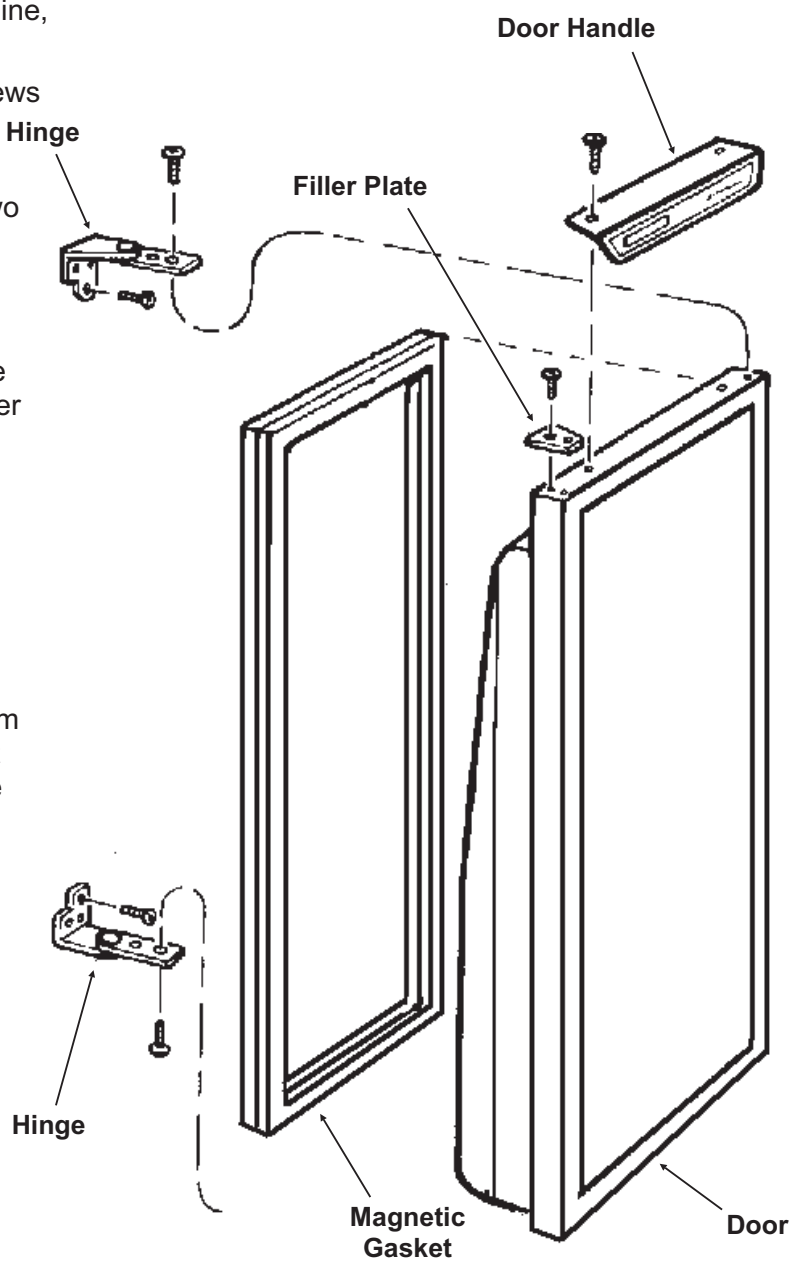

Reverse Hinges From Top to Bottom and Left to Right to Reverse Door Swing

AFTER INSTALLATION - OPERATION

Final Check List

1. Has the machine been properly uncrated, and have all packing materials and tape been removed from inside the bin?

2. Have the installation instructions been followed, including connecting the machine to water, drain and electricity?

3. Has the machine been leveled?

Initial Start Up - DCE33A-1BD, DCE33PA-1BD, DCE33A-1SSD or DCE33PA-1SSD

1. Turn on water supply.

2. With unit plugged in, rotate ice machine control knob to the ON position.

3. Allow the unit to operate for 1 hour, and check the size of the cubes, if they are not correct, adjust as recommended on page 18.

4. After the cubes are confirmed to be the correct size, replace all panels.

5. Locate the nameplate on the control box cover. Record the serial number and date of start up here in the manual. Keep the manual handy for future reference.

Serial Number:_____

Date of initial start up:_____

6. Fill out and mail the Warranty Registration.

How To Use:

The ice machine is extremely simple to use, just turn the ice machine control knob to the on position. The DCE33 will automatically begin to freeze ice and will continue to do so until the bin is full. A new machine, warm out of the box, could take as long as 48 hours to fill and shut off.

Use the scoop to remove ice and place the ice scoop in the holder provided (do not leave the scoop on the ice, as it will gradually disappear into the ice).

What to expect from the DCE33

The DCE33 will release a batch of 8 ice cubes about every 30 minutes. At the same time the cubes fall into the storage bin, water will be entering the ice machine and draining out.

Ice: The ice cubes are tapered cylinders about 1¼" in diameter at the widest end; taper down to 1" wide at the top; and are 1⅛" high. When the machine is adjusted properly, there should be a ¼" indent in the base of the cube. The ice will appear wet when fresh, this is normal. It may also develop frost on the outside and look cloudy - this is also normal (the frost will disappear when liquid is poured over the ice).

Storage: All restaurant type ice machine operate on this principal: The ice storage bin is not refrigerated; instead it's heavily insulated, much like a picnic cooler or ice chest. If the ice bin were to be refrigerated, the ice would freeze together into one very large cluster of ice, and would begin to evaporate. This would yield ice that is very poor in quality, and difficult to remove from the machine.

The DCE33 will continue to operate until ice builds up high enough to contact the bin thermostat sensor tube, then it will shut off. Models with a drain pump will occasionally pump out melt water when the machine is off. The pump will only be on for a few seconds.

Run Time: The amount of time the DCE33 will run to replace melted ice is about 6 hours per day. The amount of time the ice machine will run to replace ice removed is dependent upon how much is removed, how clean the ice machine is, and how hot the air and water supplied to the machine are. A machine that has been emptied will usually take about 24-36 hours to re-fill.

How does the machine make ice?

There are two distinct cycles: freeze and harvest.

1 freeze cycle + 1 harvest cycle = 1 batch of 8 cubes.

The Freeze cycle happens when water is sprayed against the freezing surface. The Harvest cycle is when the ice is released and water enters the machine. A complete cycle takes about 30 minutes.

Freeze: During the freeze cycle the compressor is pumping refrigerant, the fan motor is blowing air, and the water pump is circulating water. As the refrigerated surface absorbs heat from the water sprayed against it, that heat is moved to the area where the fan is blowing air. The heat is transferred to the air, and the warmed up air is discharged from the ice machine. At the same time ice is forming on the refrigerated surface (located at the upper back of the machine). When the refrigerated surface gets cold enough, the ice machine's timer will start. After a few minutes the timer will stop the freeze cycle and begin the harvest.

Harvest: During the harvest cycle the compressor is still operating, but the spray pump and fan motor have stopped. Two other components have been energized; the hot gas valve and the inlet water valve. These two valves open and warm up the freezing surface, allowing the cubes to fall into the bin. The timer is still turning, and when it gets to the end of the harvest cycle, the freeze cycle will restart.

How does the machine use water? The ice machine begins with a fixed charge of water that is contained in the reservoir. As the water is sprayed against the freezing surface, the part of water that does not contain mineral impurities will freeze and stick to the ice cup molds. The water containing impurities falls back into the reservoir. Gradually, during the freezing portion of the ice making cycle, the water in the reservoir will become highly concentrated with mineral impurities.

During the harvest cycle fresh water flows into the machine to dilute the reservoir water and to rinse the concentrated minerals down the drain.

Schematic Diagram - Shown In Harvest Cycle

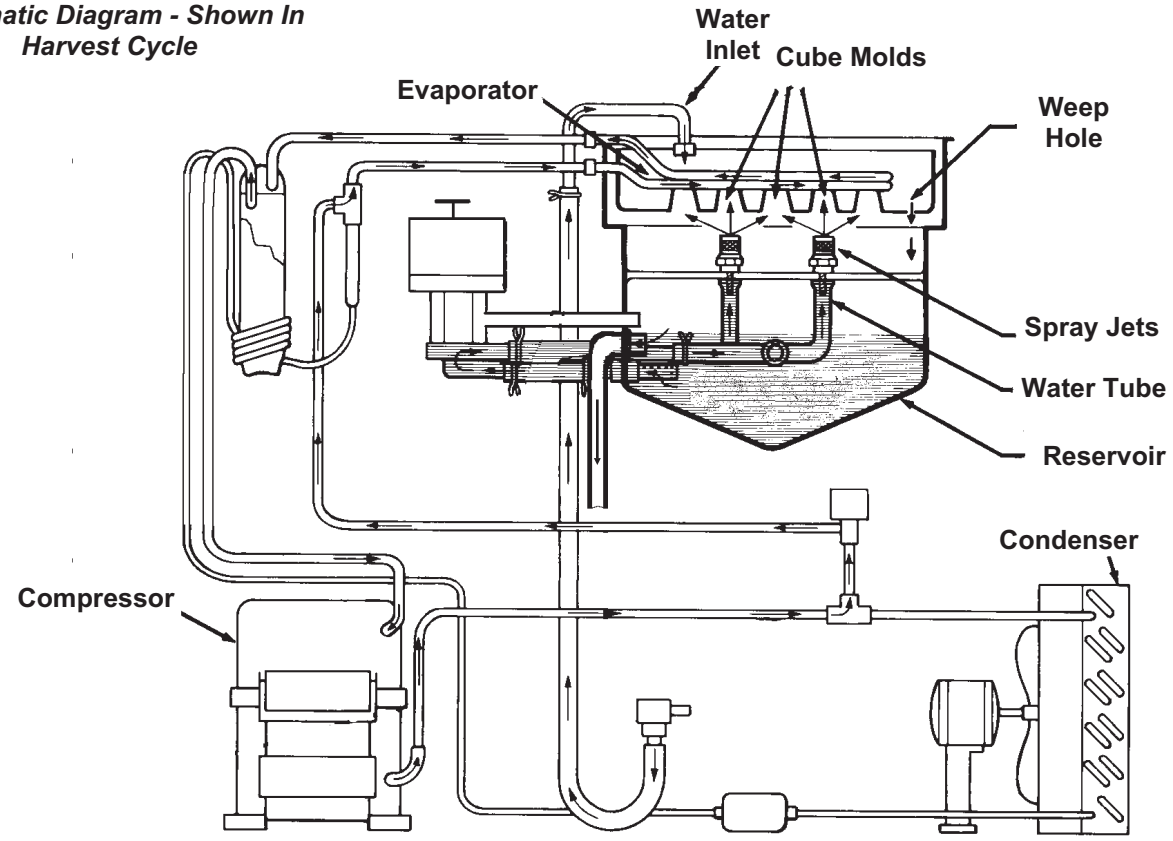

COMPONENT LOCATION

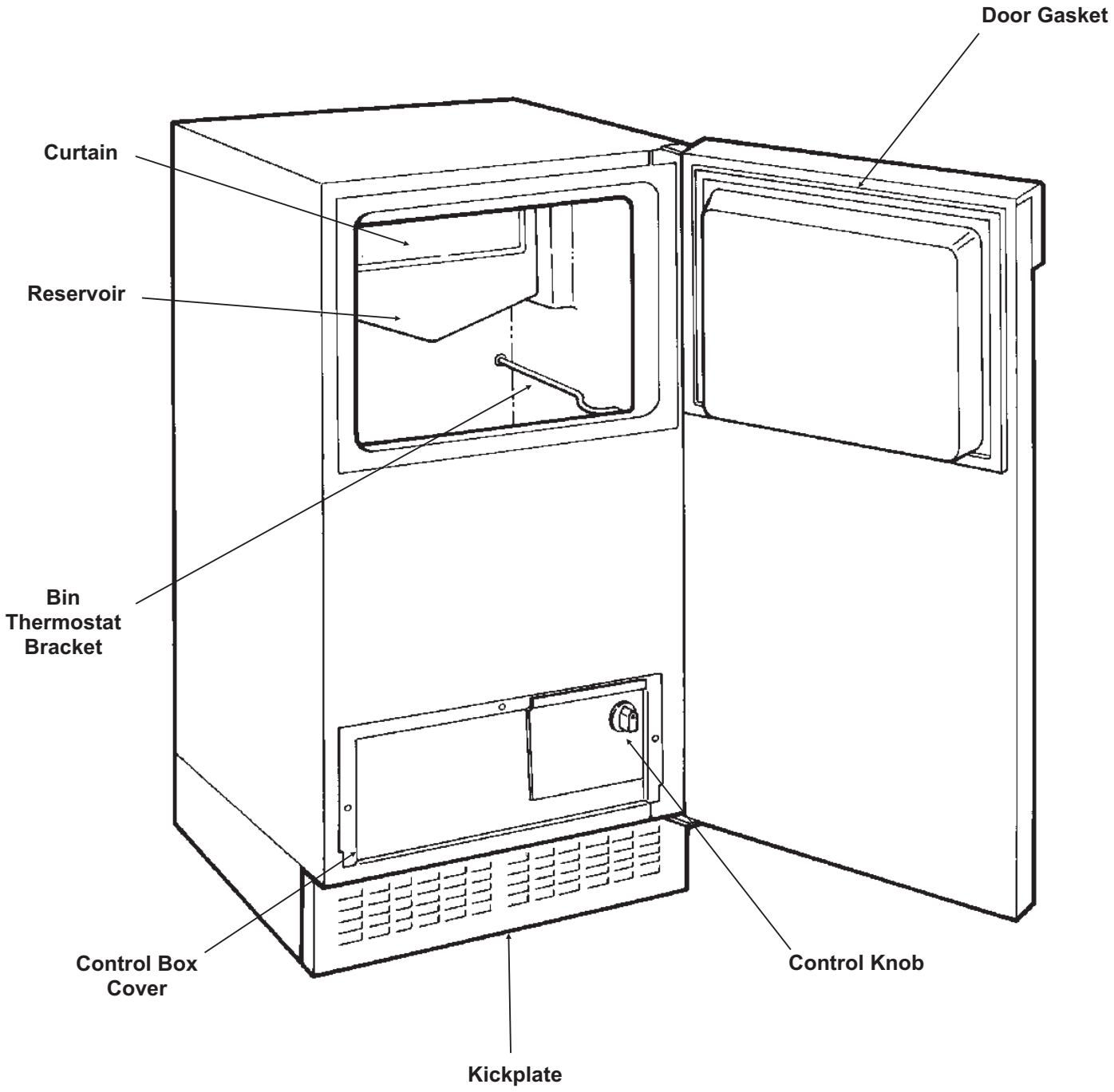

What shouldn't be done?

Never keep anything in the ice storage bin that is not ice; objects like wine or beer bottles are not only unsanitary, but the labels may slip off and plug up the drain.

Never allow the machine to operate without regular cleaning. The machine will last longer if it is kept clean. Regular cleaning should happen at least once per year, and preferably twice. Some water conditions will dictate even more frequent cleaning of the ice making section, and some carpets or pets will dictate more frequent cleaning of the condenser.

What should be kept clean?

There are 5 things to keep clean:

1. The outside cabinet & door.
2. The ice storage bin.
3. The condenser.
4. The ice making system.
5. The ice scoop.

How to clean the cabinet.

Wipe off any spills on the surface of the door and handle as they occur. If anything spilled on the door or gasket dries onto the surface, wash with soap and warm water to remove.

How to clean the ice storage bin.

The ice storage bin should be sanitized occasionally. It is usually convenient to sanitize the bin after the ice making system has been cleaned, and the storage bin is empty.
A sanitizing solution can be made of 1 ounce of household bleach and two gallons of hot (95^0F. - 115^0F.) water. Use a clean cloth and wipe the interior of the ice storage bin with the sanitizing solution, pour some of the solution down the drain. Allow to air dry.

Note: To use after winterizing, reconnect pump hose and water line. Repeat Initial Start Up.

How to clean the condenser.

The condenser is like the radiator on a car, it has fins and tubes that can become clogged. To clean:

1. Remove the kickplate.
2. Locate the condenser surface.
3. Vacuum the surface, removing all dust and lint. Caution: Do not dent the fins.

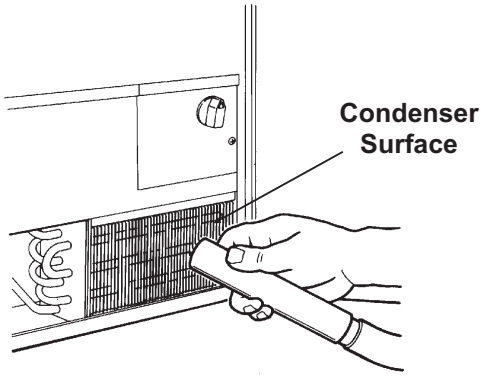

4. Replace the kickplate.

Winterizing

1. Clean the machine as explained on the next page.
2. Turn off the water supply.
3. Drain the water reservoir. See page 24, Spray Pump Repair and follow the instructions to remove the pump hose (step 2, bottom hose only).
4. Disconnect the incoming water line at the inlet water valve.

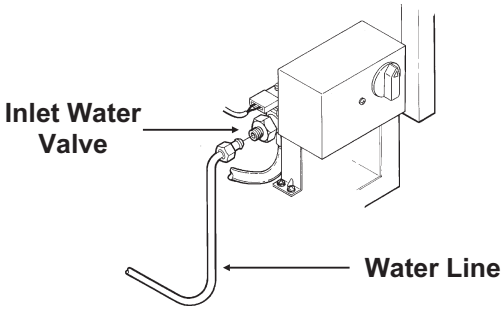

5. Remove control box cover and turn the timer into the harvest cycle.
6. With the machine operating, blow air through the inlet water valve; a tire pump could do the job.
7. Drain pump models should have about ½ gallon of RV antifreeze (propylene glycol) poured into the ice storage bin drain.

Note: Automotive antifreeze must **NOT** be used.

8. Replace control box cover. Switch off and unplug the machine.

CLEANING

How to clean the ice making system.

1. Open the door and turn the ice machine control knob to off.

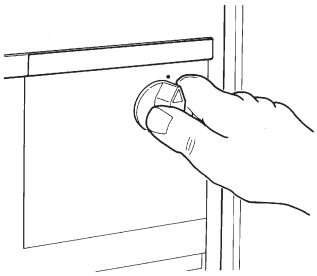

2. Scoop out all of the ice, either discard it or save it in a ice chest or cooler.

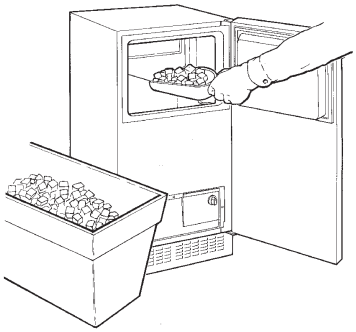

3. Pour 4 ounces of Scotsman Ice Machine Cleaner (available from a local Scotsman Distributor or Dealer, ask for part number 19-0343-06 - an 8 ounce bottle) into the ice machine reservoir.

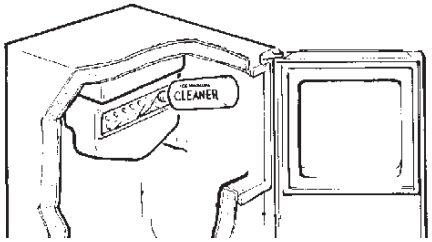

⚠WARNING	Scotsman Ice Machine Cleaner contains acids. These compounds may cause burns. If swallowed, DO NOT induce vomiting. Give large amounts of water or milk. Call Physician immediately. In case of skin contact, flush with water. Keep out of the reach of children.

4. Turn the ice machine control to ON.

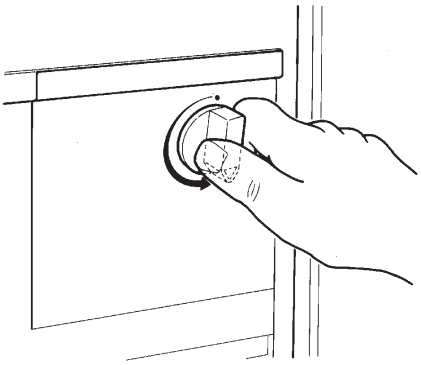

5. Allow the machine to operate for about 2 hours.

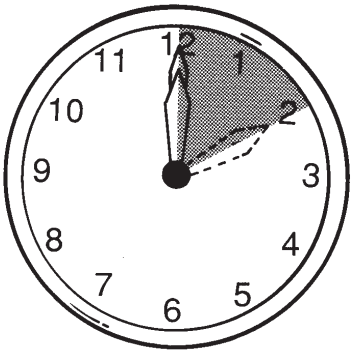

6. Pour hot (95^{0}F. - 115^{0}F.) water into the bin to melt the ice that has formed. That ice will likely be white and frosty looking.

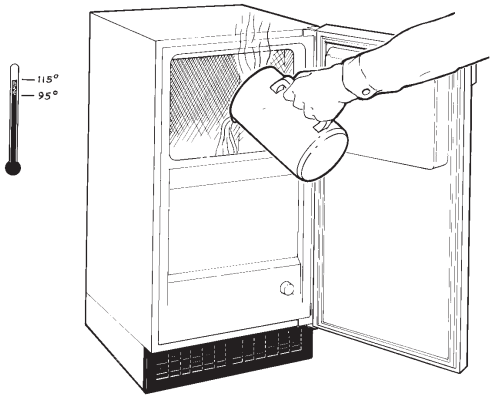

7. Clean the bin liner of mineral scale by mixing some ice machine cleaner and hot water, and using that solution to scrub the scale off of the liner.

8. Rinse the liner with hot water.

9. Sanitize the bin interior.

10. Replace the ice removed in step 2.

The ice scoop should be washed regularly, wash it just like any other food container.

ADJUSTMENTS

There are three items that may be adjusted: Cube Size, Harvest Time, and Bin Level. Note: Cube Size and Harvest Time adjustments should only be done by a qualified service person.

Cube size control.

The cube size control should only be adjusted to bring the cubes to the correct shape, the overall size cannot be adjusted. Try to adjust the cube size control when the ice machine is in the harvest cycle, or in the first 10 minutes of the freeze cycle.

1. Open the door and remove the control box cover.

2. Locate the cube size adjustment screw, and to make fuller cubes, turn the screw clockwise about

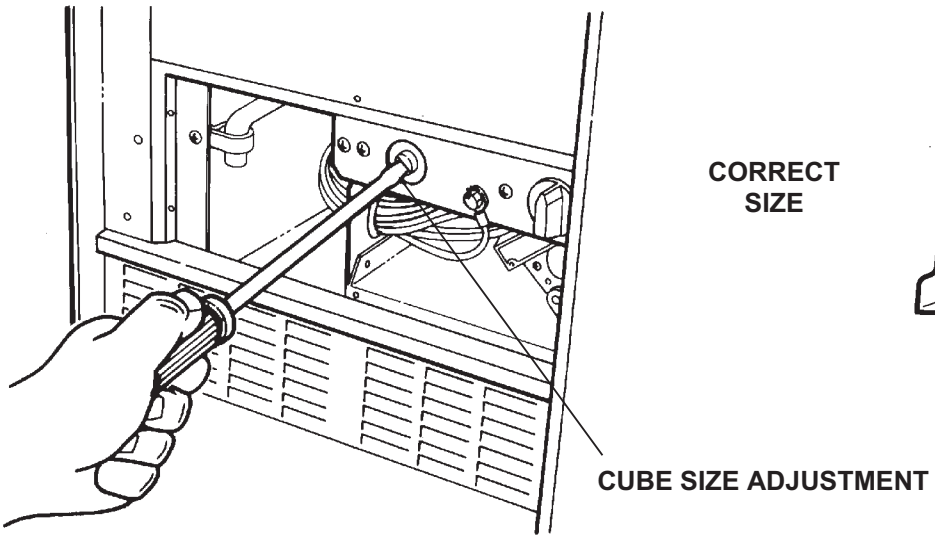

1/4 turn. This will make the freezing cycle longer.

3. To shorten the freezing cycle and make cubes that are not as full, turn the adjustment screw 1/4 turn counterclockwise.

4. After the next freezing cycle, the cubes should have responded to the adjustment, if another adjustment is required, do it early in the freeze cycle.

SIDE VIEW OF CUBES

TOO BIG

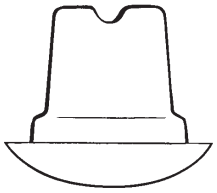

CORRECT SIZE

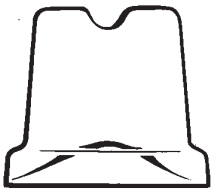

TOO SMALL

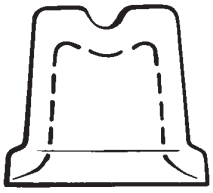

Bin's ice level.

When the ice machine shuts off the ice level in the bin should be even with the metal tube inside the bin. If the ice in the bin is too high or low, turn the ice machine control knob to adjust the bin thermostat.

1. To lower the ice level, turn the knob counterclockwise. Usually a 1/8 turn will be enough.

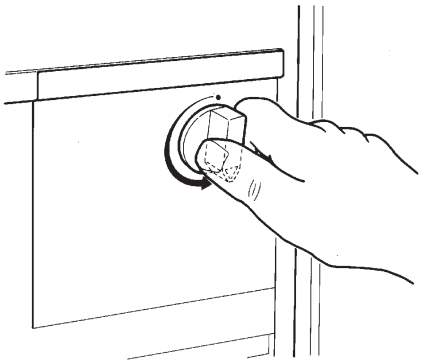

2. To increase the ice level, turn the knob clockwise. Usually a 1/8 turn will be enough.

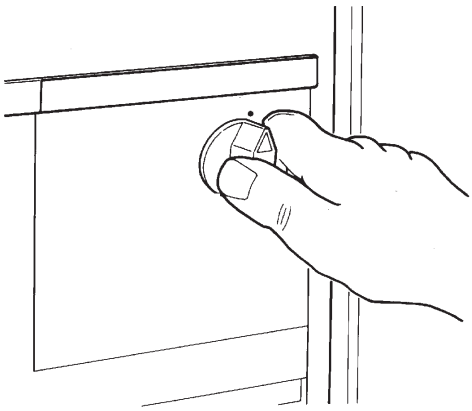

Timer - up to DCE33A-1BD, DCE33PA-1BD, DCE33A-1SSD or DCE33PA-1SSD

The amount of harvest time may be adjusted. It is preset from the factory at about 3 minutes, which should be adequate to release all cubes and fill the reservoir. If the timer needs to be adjusted:

⚠WARNING

Electrical Shock Hazard

Disconnect Electrical Power Before Beginning Removal of Parts

1. Unplug or disconnect the electrical power.
2. Remove the kickplate.
3. Remove the control box cover.
4. Locate the timer, and loosen the set screw that holds the two halves of the timer cam together.

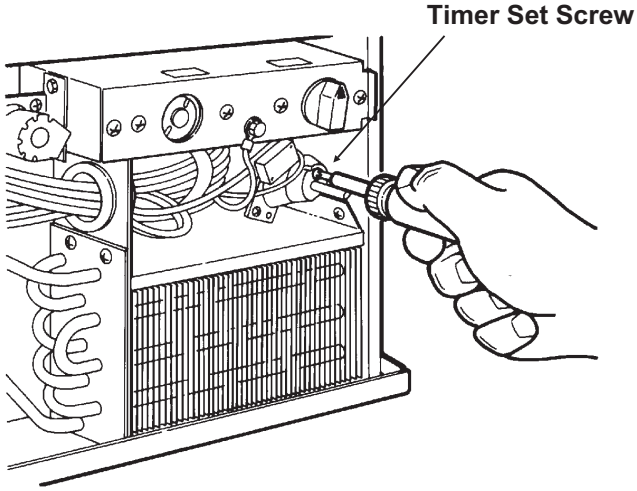

ADJUSTMENT OF THE TIMER

5. Rotate one half of the cam to open or close the lower portion of the cam. More of an opening equals more harvest time and less of an opening means less harvest time.
6. Tighten the set-screw.
7. Replace the control box cover and kickplate.
8. Reconnect the electrical power.

DCE33

HARVEST TIME ADJUSTMENT, models DCE33A-1BD, DCE33PA-1BD, DCE33A-1SSD or DCE33PA-1SSD

The harvest time can be adjusted so that all the ice is released during the harvest period, with a few seconds extra for a safety margin. The adjustment range is between 2 to 5 minutes.

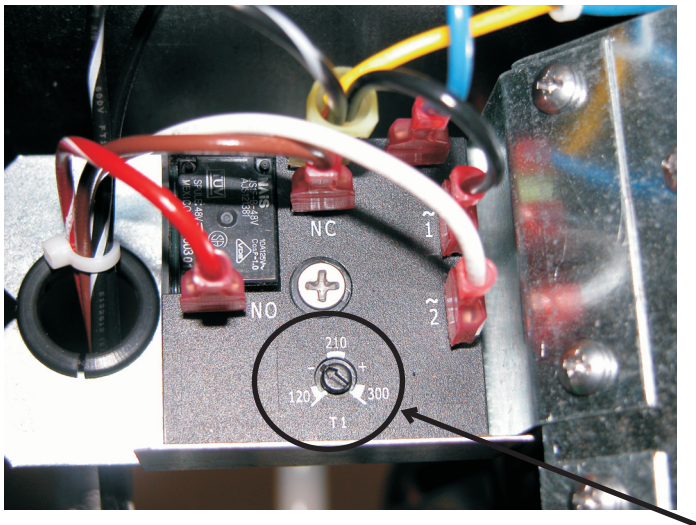

There is an adjustment screw on the surface of the electronic timer. Rotate the screw CCW to reduce harvest time, and CW to increase it. It should be set to match the machine's performance. If the machine takes 2 and a half minutes to release the ice, the harvest time should be set to about 3 minutes.

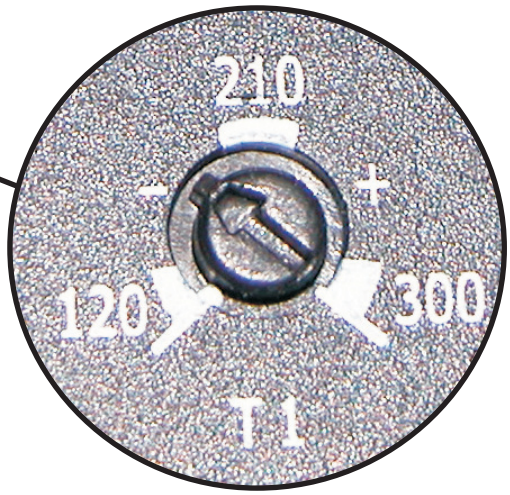

SERVICE DIAGNOSIS

PROBLEM	POSSIBLE CAUSE	PROBABLE CORRECTION
The machine does not operate	The machine is unplugged	Plug the machine in.
	Breaker tripped or fuse is blown.	Reset breaker/replace fuse - if it happens again, call for service to check for a short circuit in the machine.
	Ice machine control turned to OFF.	Turn ice machine control to ON.
	Bin thermostat open keeping machine off.	Ice on sensor tube - its then normal for the machine to be off.
		Ice machine in a room below 50 degrees - room needs to be warmer for machine to operate.
		Bin thermostat stuck open, needs to be replaced.
	Timer contacts open.	Replace timer.
Cubes are too big	Cube size control set too cold.	Adjust cube size control for a smaller cube.
Cubes are too small	Cube size control set too warm.	Adjust cube size control for a larger cube.
	Not enough water.	Check water supply - filter may be restricted.
		Check inlet water valve - inlet screen may be restricted.
	Cube size control stuck closed - timer runs all the time.	Replace cube size control
Cubes are partially formed - have ragged sides	Spray jets partially clogged.	Clean ice making system with ice machine cleaner.
Machine makes ice, but bin does not fill up with ice	The bin should fill up and the machine shut off in 24-36 hours. If not, the condenser may be dirty.	Clean the condenser.
	The bin drain may be partially restricted	Clean out the drain, check the installation.
	The air flow to the ice machine may be obstructed.	Check the installation - the machine must be free of obstructions at the kick plate.
Cubes are partially formed - are white at the bottom	Not enough water in the reservoir.	Check water supply - filter may be restricted
		Check inlet water valve - inlet screen may be restricted.
		Check for a water leak at the reservoir.
		Water leaking into bin from torn or mis-positioned curtain. Check curtain position and condition. Reposition or replace as needed.

PROBLEM	POSSIBLE CAUSE	PROBABLE CORRECTION
No ice falling in bin, but machine operates	Ice may be stuck in the evaporator and the unit is “frozen up”.	Check water supply - filter may be restricted
		Check inlet water valve - screen may be restricted, or valve does not operate.
		Hot gas valve may not operate - check and repair/replace.
		Harvest time set too short - timer needs adjustment.
	Too much heat load.	Inlet water valve leaks thru, needs to be replaced.
	No water spray	Water pump does not work, replace it.
		Water leak from reservoir, locate and repair.
	Cube size control will not close	See “Too much heat load” or “not enough refrigerant”
		Control defective - must be replaced.
	No airflow	Fan motor not turning, needs to be replaced.
		Fan blade broken, needs to be replaced.
		Condenser completely blocked up, needs cleaning.
	Not enough refrigerant	Add low side access valve, locate leak, recover refrigerant, repair, replace dryer, evacuate and weigh in the nameplate charge.
	Restricted system	Add low side access valve, recover refrigerant, replace dryer, evacuate and weigh in the nameplate charge.
	Hot gas valve leaks thru	Add low side access valve, recover refrigerant, replace hot gas valve and dryer, evacuate and weigh in the nameplate charge.
	Compressor will not operate or pumps poorly.	Start relay or capacitor needs to be replaced.
		Add low side access valve, recover refrigerant, replace compressor and dryer, evacuate and weigh in the nameplate charge.

Curtain

⚠WARNING

Electrical Shock Hazard

Disconnect Electrical Power Before Beginning Removal of Parts

The curtain keeps the water that sprayed by the pump from falling in the bin.

The “sheet” type curtain is replaced by:

1. Removing 4 screws holding the curtain and the curtain stiffener to reservoir.

2. Pulling the curtain and curtain stiffener out of the machine.

3. Replace with a new curtain and install as shown.

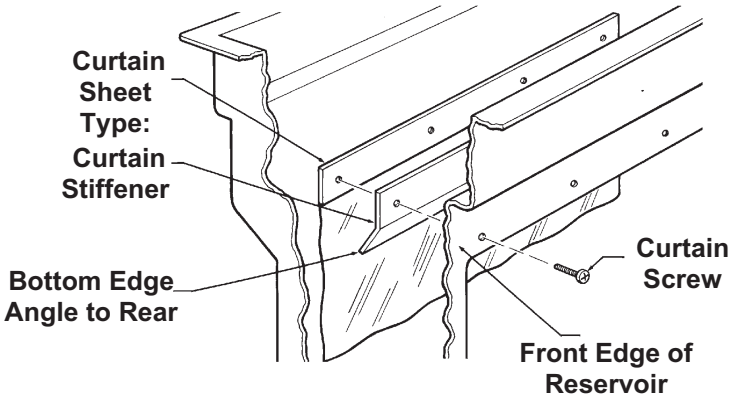

Curtain and Curtain Stiffener MUST Be Installed As Shown

Inlet Water Valve

The inlet water valve may need to be cleaned or replaced. If there is not enough water coming into the machine, the valve may need to be cleaned. If the valve does not work at all, or does not shut off tightly, it should be replaced.

1. Unplug or disconnect electrical power.

2. Shut off water supply

3. Remove kickplate

4. Remove the control box cover.

5. Unscrew flare nut from inlet water valve inlet . If the valve is being replaced, proceed to step 10.

6. Unscrew brass fitting from body of inlet water valve.

SERVICE OF THE INLET WATER VALVE

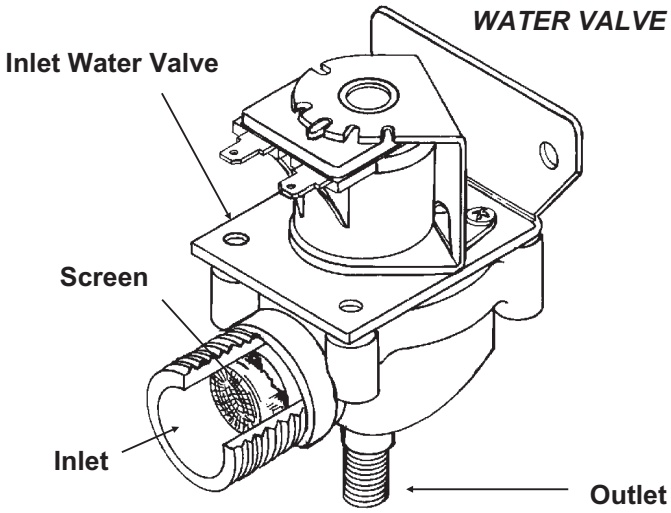

Check the screen of the valve, it may be clogged and is restricting the flow of water into the machine. If that is the problem, clean the screen and reverse the steps so far to reassemble.

7. Loosen the screws in the back of the control box, and remove the inlet water valve.

8. Remove the discharge hose from the outlet of the water valve.

9. Unplug the wire harness from the top of the valve.

10. Replace with a new valve, and reverse the above steps to reassemble.

Timer - All except DCE33A-1BD, DCE33PA-1BD, DCE33A-1SSD or DCE33PA-1SSD

⚠WARNING

Electrical Shock Hazard

Disconnect Electrical Power Before Beginning Removal of Parts

The timer may need to be replaced if it does not turn, or if it turns and then stops (except at the end of the harvest cycle - the timer will ALWAYS stop at the end of the harvest cycle), or if the microswitch mounted to it does not switch the machine from the freeze to the harvest and back again.

Caution: The timer is controlled by the cube size control, and will not turn if the cube size control does not work.

1. Unplug or disconnect the electrical power to the ice machine.
2. Remove the kickplate.
3. Remove the control box cover.
4. Remove the screws holding the timer to the control box.

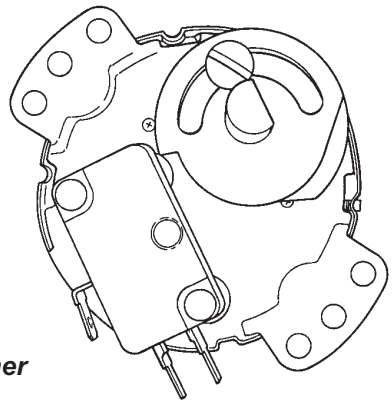

Timer

5. Disconnect the wires at the timer microswitch.
6. Disconnect the wires from the timer motor at the terminal board.
7. Remove the timer from the ice machine.
8. Reverse the above steps to replace.

Harvest Timer - DCE33A-1BD, DCE33PA-1BD, DCE33A-1SSD or DCE33PA-1SSD

1. Disconnect electrical power.
2. Remove service panel.
3. Remove screw in center of timer, pull out and disconnect wires.
4. Reverse steps to reassemble.

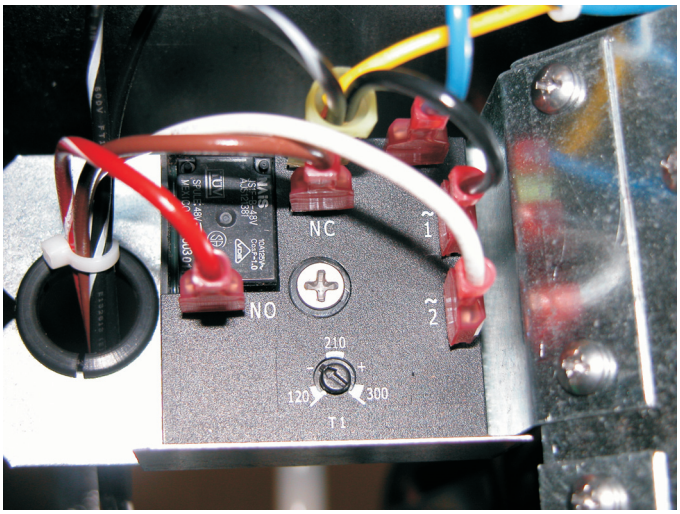

Cube Size Control

⚠WARNING

Electrical Shock Hazard

Disconnect Electrical Power Before Beginning Removal of Parts

The cube size control controls the timer during the freeze cycle. If the timer will not start, the cube size control may be the problem. Removal of the cube size control requires removal of the ice storage bin.

1. Unplug or disconnect the electrical power to the ice machine.

2. Remove the kickplate.

3. Go thru the steps to remove the ice storage bin.

4. Remove screws holding cube size control body to control box.

5. Remove wires connected to the cube size control.

6. Carefully pull cube size control and attached capillary tube from the control box, and follow the capillary tube to the top of the evaporator.

7. The end of the cube size control is inserted into a socket attached to the evaporator.

8. Remove the cube size control from the socket and from the ice machine.

9. Reverse the above steps to replace.

CUBE SIZE CONTROL REPLACEMENT

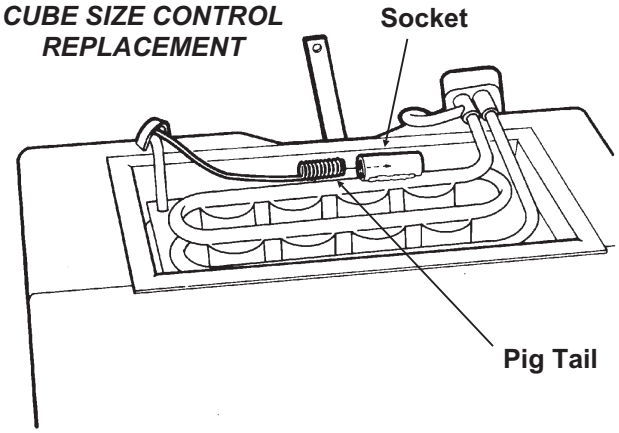

10. Adjust the cube size control per the adjustment sequence on page 16.

Bin Thermostat

The bin thermostat is the automatic on-off control for the ice machine.

1. Unplug or disconnect the electrical power to the ice machine.

2. Pull the machine out from its installed location.

3. Remove the back panel.

4. Remove the kickplate.

5. Remove the control knob

6.. Remove the control box cover.

7. Remove the screws holding the bin thermostat to the control box.

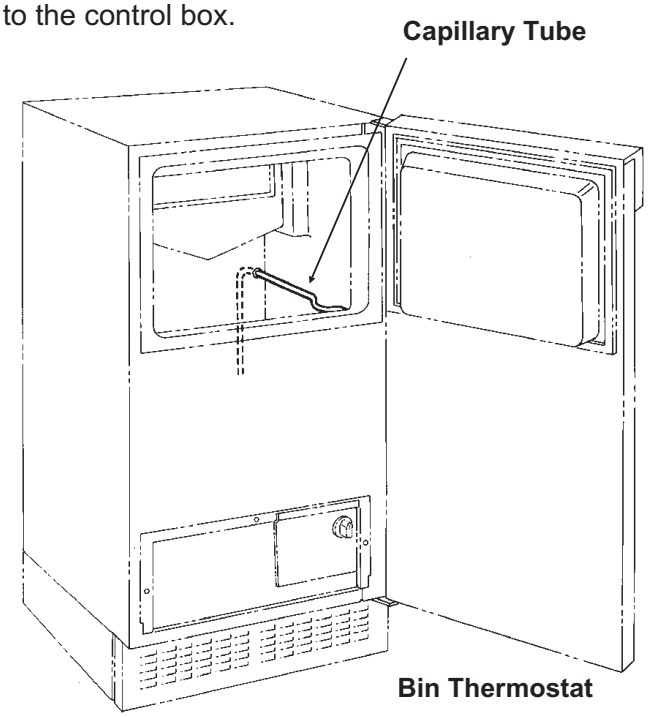

8. Remove the wires attached to the bin thermostat.

9. Pull the bin thermostat and capillary tube from the control box, trace the capillary tube to the bin level control tube and remove the capillary tube from the tube. Remove the bin thermostat from the ice machine.

10. Reverse the above steps to replace.

Spray Pump

⚠WARNING

Electrical Shock Hazard

Disconnect Electrical Power Before Beginning Removal of Parts

The water pump that forces the water from the reservoir through the spray jets.

1. Disconnect electrical power.

2. Open the bin door and locate the three hoses connected to the water pump.

A. Loosen the hose clamps from the pump hoses.

B. Remove the pump hoses from their connections.

3. Disconnect water and drain tubes.

Pump Hose Removal

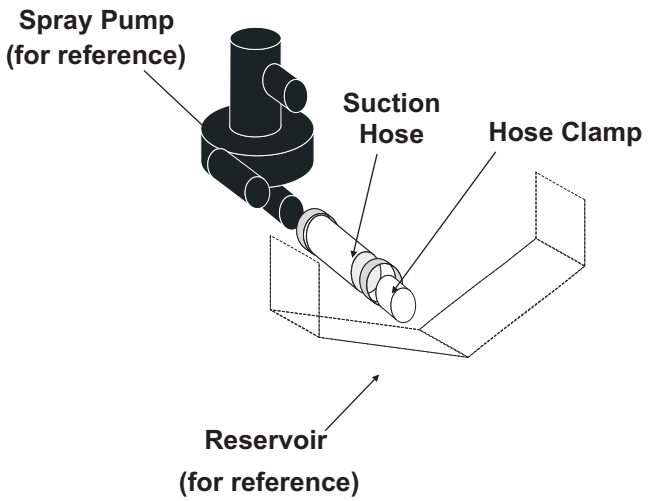

4. Carefully pull machine out from its installed location to expose the back panel.

5. Remove the back panel.

6. Disconnect wires from the top of the pump motor.

7. Remove two screws holding pump to bin, and remove the pump from the ice machine.

8. Reverse the above steps to re-assemble.

Spray Jets

Spray Jets are small nozzles that are under the freezing surface, they spray a narrow pattern of water at the freezing surface. If plugged or restricted, poorly shaped ice cubes will form.

If the spray jets are removed the o-rings between the water inlet tube and the spray jet bases must be in place (see illustration).

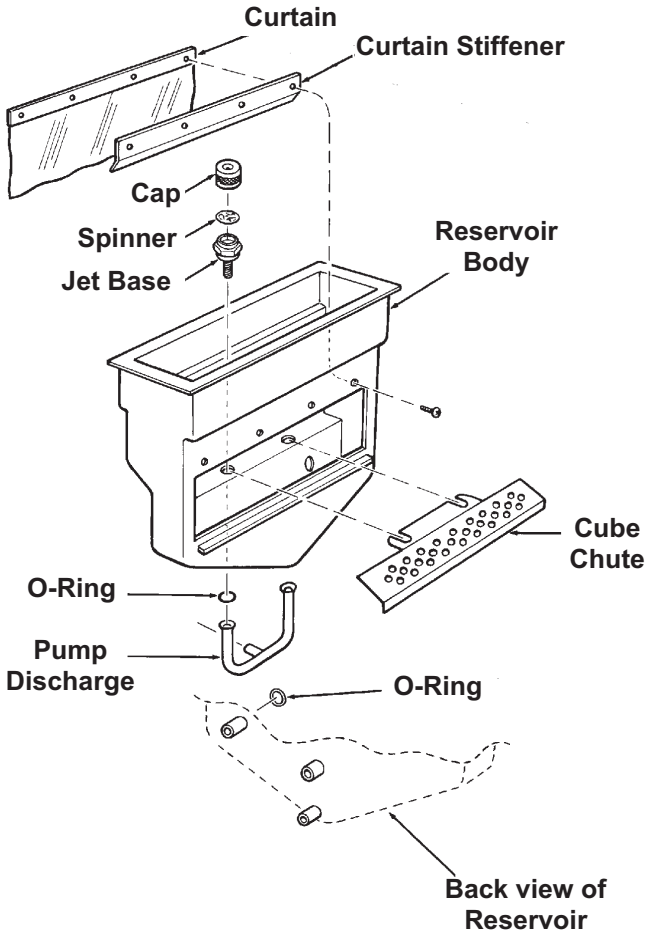

DCE33 SERVICE PARTS

The section contains the parts list for the DCE33. The DCE33 has been manufactured in either a White, Black or Stainless Steel finish.
A "D" series model was introduced in 2011 (as in DCE33A-1BD), it has a different timer and wiring diagram.
Please check the part description before ordering any part.

Table of Contents

Cabinet ..... Page 2

Pump, Evaporator, Storage Bin ..... Page 3

Drain Pump Components ..... Page 4

Condensing Unit ..... Page 5

Reservoir ..... Page 6

CONTROL BOX - all models except DCE33A-1BD, DCE33PA-1BD, DCE33A-1SSD or DCE33PA-1SSD ..... Page 7

CONTROL BOX - for DCE33A-1BD, DCE33PA-1BD, DCE33A-1SSD or DCE33PA-1SSD ... Page 8

Compressor ..... Page 9

Drain Pump Model Wiring Diagram - Prior to August 2000 ..... Page 11

Gravity Drain Model Wiring Diagram - Prior to August 2000 ..... Page 12

Drain Pump Model Wiring Diagram after August 2000 up to D series ..... Page 13

Gravity Drain Model Wiring Diagram after August 2000 up to D series ..... Page 14

Wiring Diagram for DCE33A-1BD, DCE33PA-1BD, DCE33A-1SSD or DCE33PA-1SSD ..... Page 15

Schematic Diagram DCE33A-1BD, DCE33PA-1BD, DCE33A-1SSD or DCE33PA-1SSD ..... Page 16

DCE33 SERVICE PARTS

Cabinet

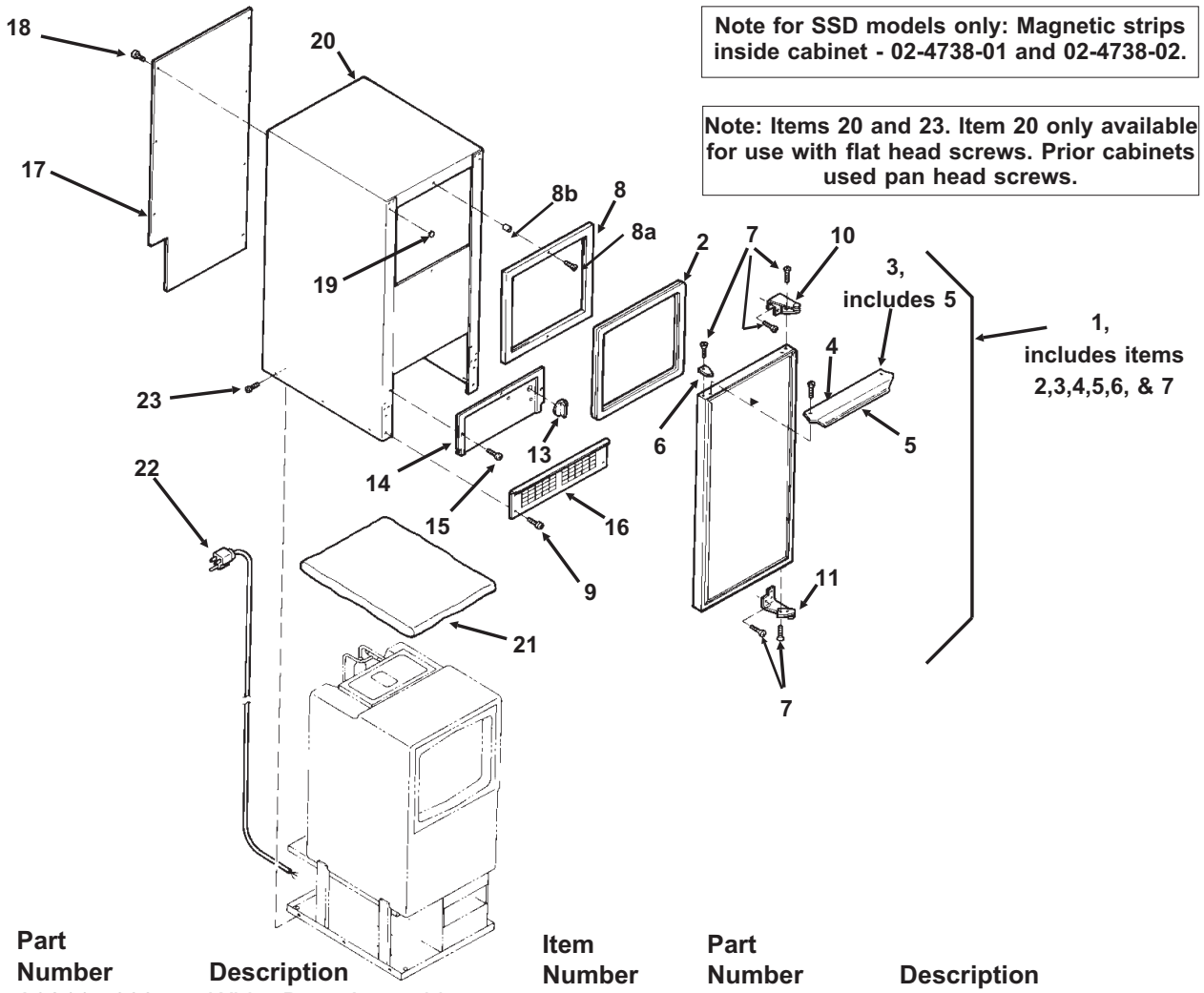

Note for SSD models only: Magnetic strips inside cabinet - 02-4738-01 and 02-4738-02.

Note: Items 20 and 23. Item 20 only available for use with flat head screws. Prior cabinets used pan head screws.

Item Number	Part Number	Description
1.	A32117-003	White Door Assembly
	A32117-010	Black door assembly
	A28866-012	Stainless door assembly
2.	13-0826-04	Gasket
3.	A29043-001	Alum. Door Handle (white)
	A29043-003	Alum. Door Handle, (black)
4.	03-1607-01	Head Screw (2)
5.	15-0730-01	Nameplate strip (white)
	15-0730-02	Nameplate strip (black)
6.	15-0648-01	Alum. Hinge Fill Plate, Rt.
	15-0648-02	Alum. Hinge Fill Plate, Lt.
7.	03-1418-24	Screw (10)
8.	13-0828-01	Gasket (white)
	13-0828-02	Gasket (grey)
8a	03-1419-08	Screw - not for ss
	03-1404-26	Screw for SS cabinets
8b	02-2701-01	Spacer
9.	03-1419-26	Screw, black
	03-1419-29	Screw, white
10.	15-0799-01	Hinge

Item Number	Part Number	Description
11.	15-0799-02	Hinge
13.	02-3141-01	Knob, Bin Thermo
14.	A34877-002	Cont Box cover - white
	A34877-003	Cont Box cover - black
	A40162-001	Cont Box cover - SS
14a	17-3465-01	Bin level control label
15.	03-1404-07	Screw (6)
16.	02-2243-02	Kickplate - black
17.	A29102-001	Rear Panel
18.	03-1404-08	Screw (9)
19.	02-2481-01	Plug (6) (white)
	02-2481-02	Plug, black
	02-1874-11	Plug, nickel
20.	A38803-021	Cabinet (white)
	A38803-022	Cabinet (black)
for flat head screws, use began w/sn 05111320015862		
	A40159-001	Cabinet (stainless steel)
21.	A26787-001	Insulation (in Bag)
22.	12-2571-01	Power cord & wire harness
	12-1638-21	For D series
23	03-1431-00	Screw, pan head
	03-1419-29	Flat head screw, white

DCE33 SERVICE PARTS

Pump, Evaporator, Storage Bin

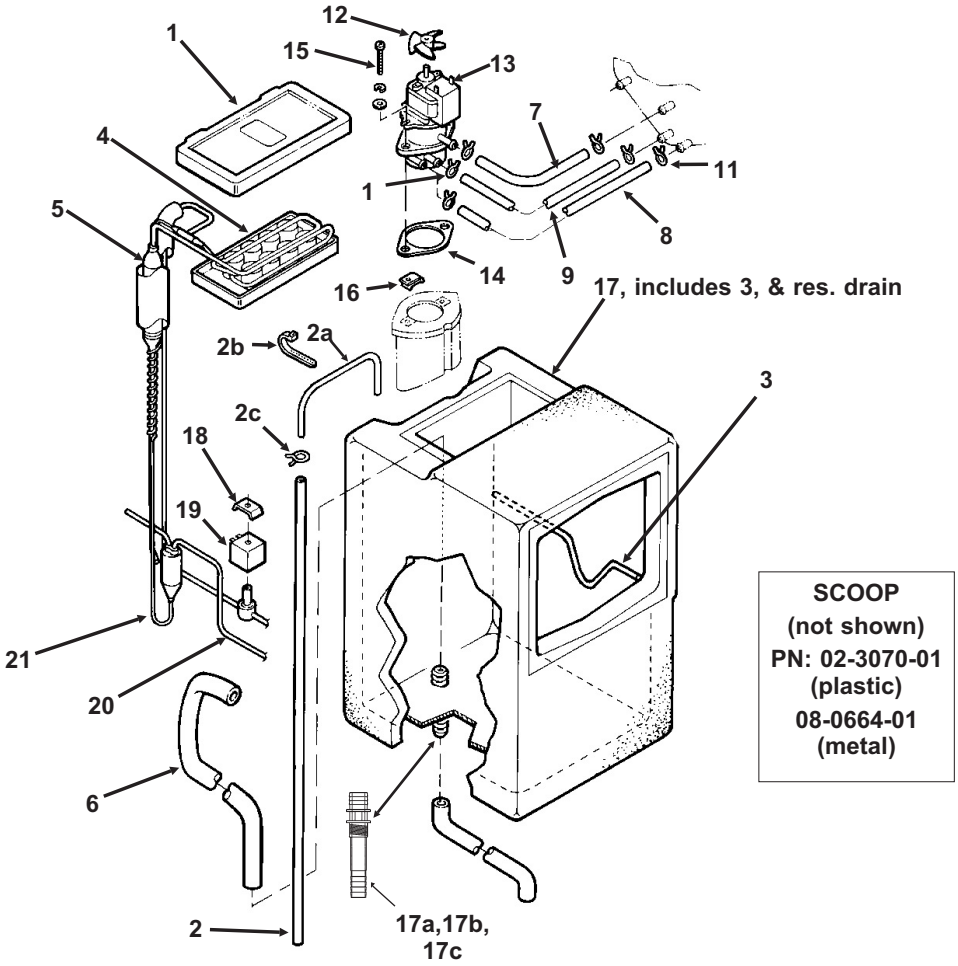

Item Number	Part Number	Description
1.	02-2274-01	Platen Cover
2.	13-0674-01	Tube, 37"
2a	A27027-001	Copper inlet tube
2b	no number	Tube holder
2c	02-1727-01	Hose clamp
3.	A34816-001	Bin Thermostat bracket
4.	02-3489-20	Evaporator, does NOT include suction line and accumulator
5.	A36699-020	Evaporator, Complete
6.	13-0899-01	Res. drain hose
7.	13-0674-16	Tube, 5/8" Req. 4.25"
8.	13-0674-15	Tube,1/2", Req 3.25"
9.	13-0674-15	Tube, 1/2", Req. 3-5/8"
10.	02-1775-02	Clamp (2)
11.	02-0534-02	Clamp (4)
12.	02-1719-00	Fan Blade
13.	A30625-001	Spray Pump
14.	13-0687-00	Gasket
15.	03-1719-01	Screw
16.	no longer used	Speed Nut (2)
17.	A36930-020	Bin Assembly, includes reservoir drain hose & drain fittings
17a	02-3323-01	Drain fitting (foamed in bin)
17b	13-0617-13	O-Ring
17c	03-1394-05	Pal nut
18	12-2569-03	Clip, Hot Gas Valve
19.	12-2569-02	Coil, Hot Gas Valve replaces coils that have encapsulated wires
	11-0562-22	Coil, hot gas valve replaces coils that have terminals
20.	11-0562-21	Hot Gas Valve kit
21	02-3490-01	Drier

DCE33 SERVICE PARTS

Drain Pump Components

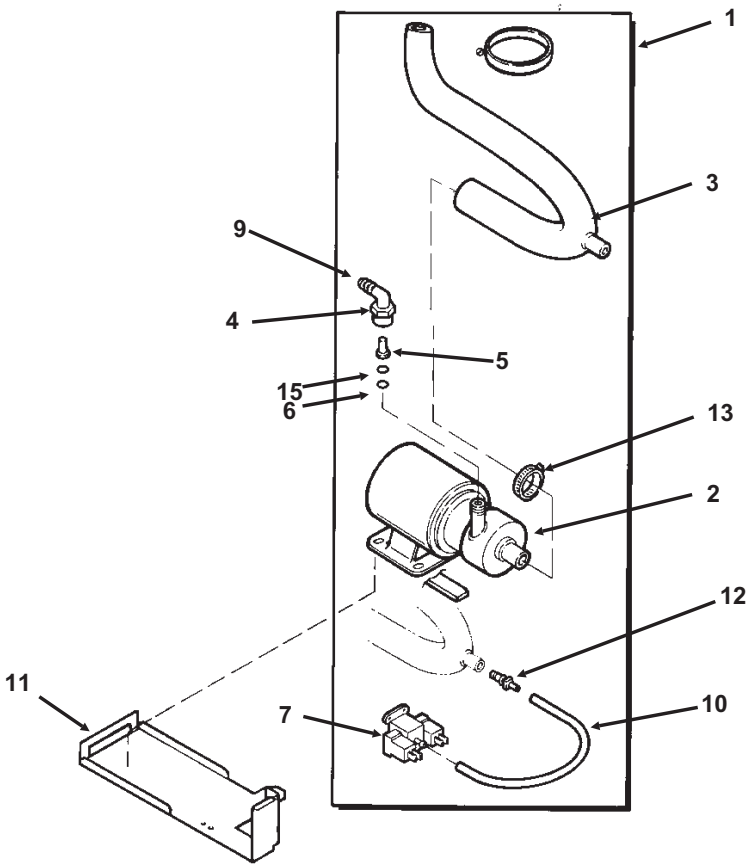

Item Number	Part Number	Description
1.	A36892-020	Drain Pump Kit, for all except DCE33A-1BD and DCE33A-1SSD
	A39885-001	Drain pump kit, for DCE33A-1BD or DCE33A-1SSD

use to **convert** any DCE33 gravity model to pump type. Pump must be ordered separately.

2	12-2503-21	Drain pump only,

use to **replace** drain pumps or w/kit to convert.

Pump Kit Service Parts

3	02-3369-01	Inlet hose
4	02-3522-01	Elbow
5	02-3374-01	Check valve
6	13-0617-08	O-ring
7	11-0504-01	Pressure switch
8	obsolete	Impeller & housing kit
9	A37334-001	Discharge hose
10	05-0591-01	Switch hose
11	A36746-001	Mounting bracket
12	02-3406-01	Barbed connector
13	02-2814-11	Clamp
14	12-2580-01	Harness
	12-3001-01	Harness, for converted-to-pump DCE33A-1BD, DCE33PA-1D, DCE33A-1SSD or DCE33PA-1SSD
15	03-3904-01	Check valve spring

DCE33 SERVICE PARTS

Condensing Unit

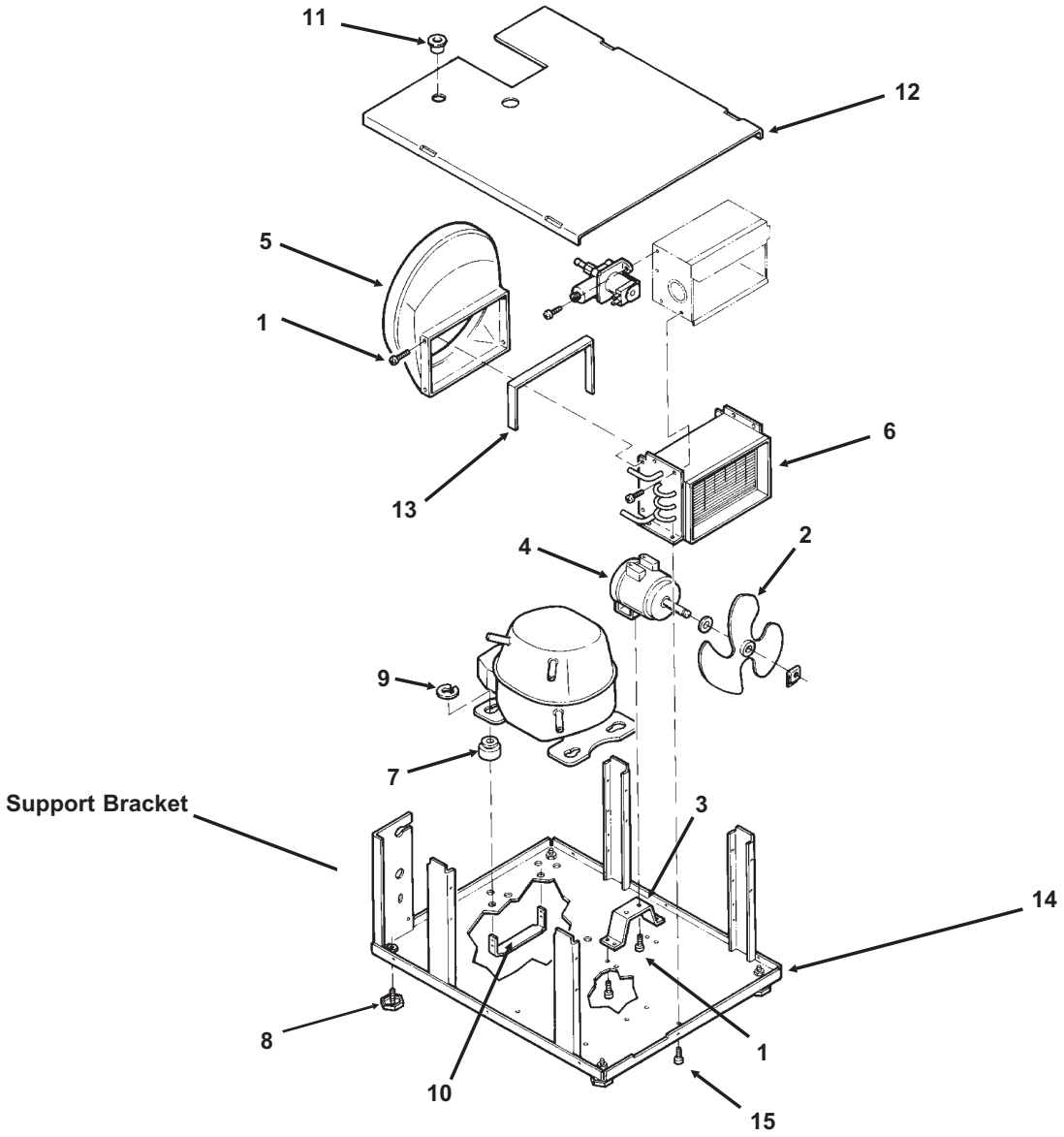

Item Number	Part Number	Description
1.	03-1404-08	Screw (4)
2.	18-3710-01	Fan Blade
3.	A28798-001	Fan Motor Bracket
4.	12-2396-21	Fan Motor
	18-8752-10	Blade pad
	18-8752-11	Blade nut
5.	02-2871-01	Fan Shroud
6.	18-3729-01	Condenser
7.	18-4700-28	Grommet
8.	03-1608-01	Leg Leveler
9.	03-1407-08	Washer
	03-3821-01	Clip
10.	A29015-001	Bracket

Item Number	Part Number	Description
11	12-1213-10	Bushing
12	A37732-001	Upper base plate
13	13-0609-00	Foam tape
14	A28921-001	Lower base plate
	A38638-001	Lower base plate
	use began w/sn 05111320015862	
	Support brackets part of item 12	
	A40164-001	Base pan for -1SSD
15	03-1531-01	Screw

DCE33 SERVICE PARTS

Reservoir

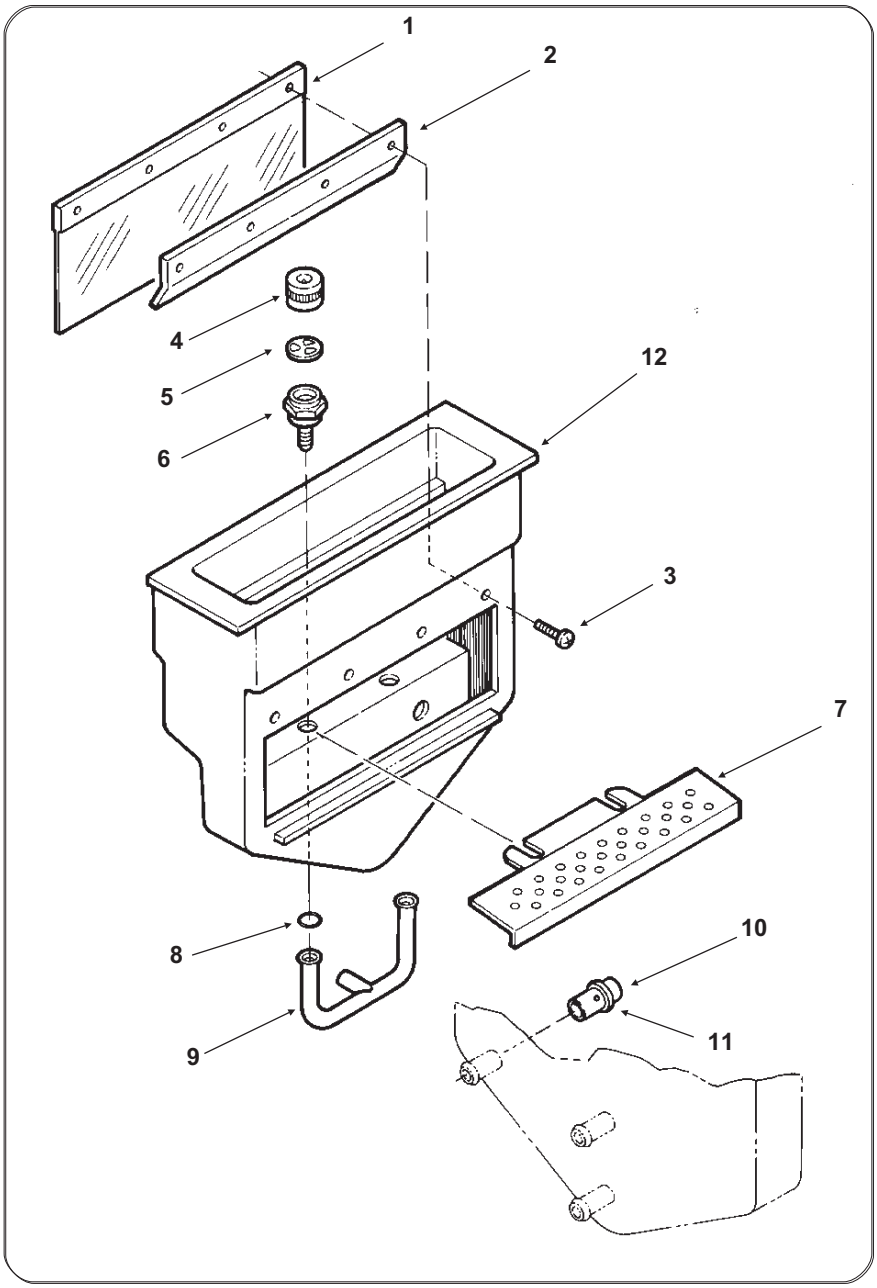

Item Number	Part Number	Description
1.	02-2479-21	Curtain
2.	A24155-001	Curtain stiffener
3.	03-1404-16	Screw
4.	02-1841-00	Nozzle
5.	A09543-000	Spinner
6.	02-1840-00	Jet Base
7.	A22518-000	Cube Chute
8.	13-0617-08	O-ring
9.	02-2704-01	Spray Bar Assembly
10.	05-0593-01	SS nipple
11.	13-0617-01	O-ring
12.	02-1923-01	Bin Insert
13	A22532-001	Bin insert assy

DCE33 SERVICE PARTS

CONTROL BOX - all models except DCE33A-1BD, DCE33PA-1BD, DCE33A-1SSD or DCE33PA-1SSD

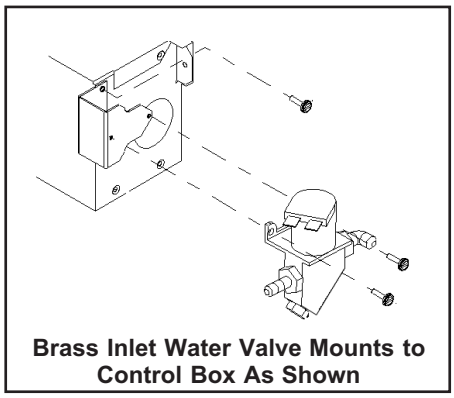

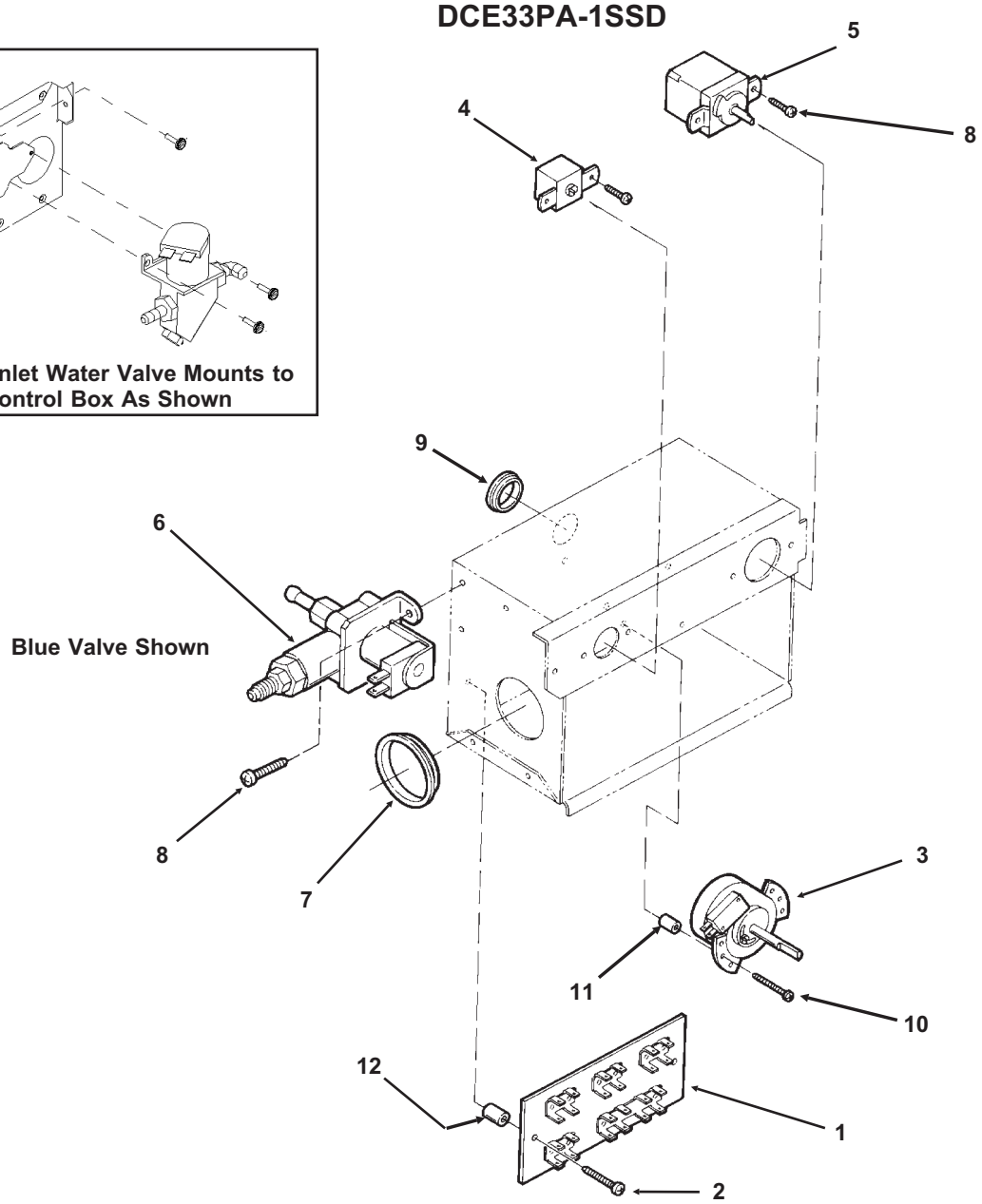

Item Number	Part Number	Description
1.	A25981-001	Terminal Board
2.	03-1638-01	Screw
3.	12-1980-01	Timer And Switch
4.	11-0503-21	Cube Size Control
5.	11-0407-21	Bin Level Control
	02-3141-01	Knob for item 5
6.	12-2907-21	Inlet Water Valve Kit (includes new fittings)
	12-2907-31	Coil only for brass valve
	12-2410-31	Coil only for plastic valve

Item Number	Part Number	Description
7.	12-1213-12	Bushing
8.	03-1403-17	Screw
9	12-1213-04	Snap bushing
10	03-1638-02	Screw
11	02-2242-06	Stand off
12	02-2242-05	Stand off
Not Shown		
13	A39918-001	Kit to retrofit electronic timer to prior model.

DCE33 SERVICE PARTS

CONTROL BOX - for DCE33A-1BD, DCE33PA-1BD, DCE33A-1SSD or DCE33PA-1SSD

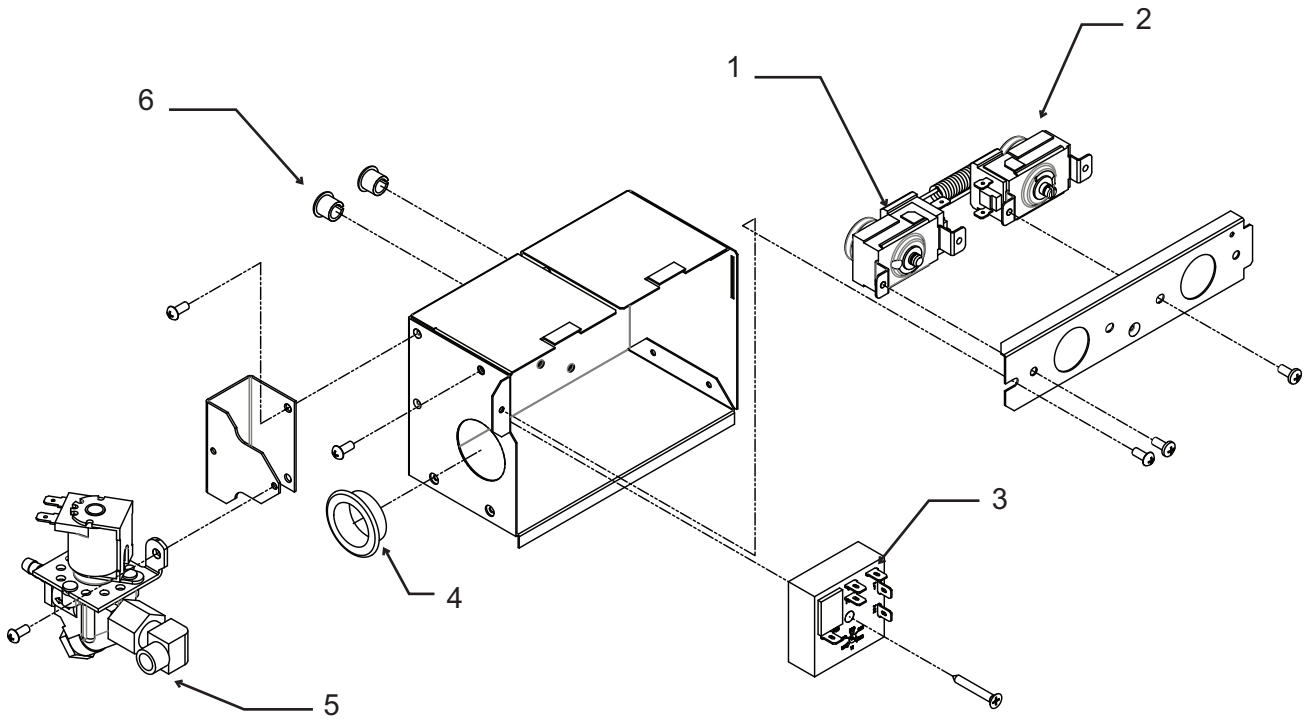

Item Number	Part Number	Description
1	11-0503-21	Cube size control
2	11-0407-21	Bin level control
3	12-2985-01	Timer
	03-1419-16	Screw
4	12-1213-12	Snap bushing
5	12-2907-21	Inlet water valve kit, includes new fittings
	12-2907-31	Coil only for inlet water valve
6	12-1213-04	Snap bushing

DCE33 SERVICE PARTS

Compressor

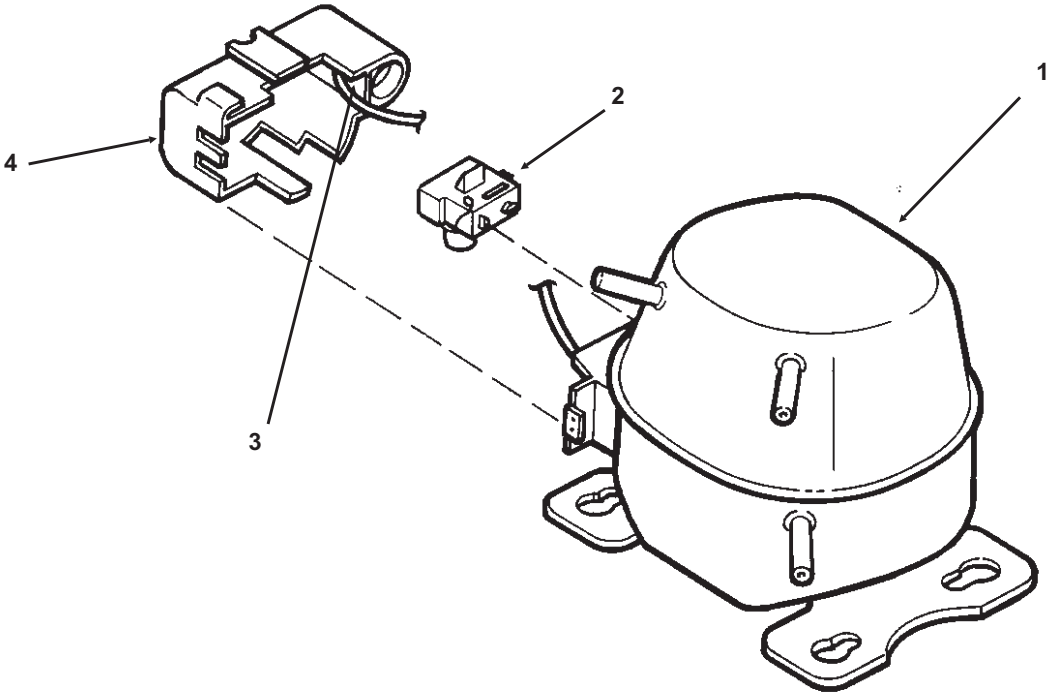

Item Number	Part Number	Description
1.	18-8776-21	Compressor Kit, Includes Relay, Overload, Instructions
2.	18-8776-51	Relay
3	18-8776-52	Overload
4.	18-8776-54	Cover

DCE33 SERVICE PARTS

Kit Parts

K-SS Door Sleeve Kit

02-3846-01	Sleeve
02-3847-01	Handle
03-1403-50	Screw for handle
03-1407-06	Washer
03-1410-03	Lockwasher
03-3811-01	Screw

DCE33 SERVICE PARTS

Drain Pump Model Wiring Diagram - Prior to August 2000

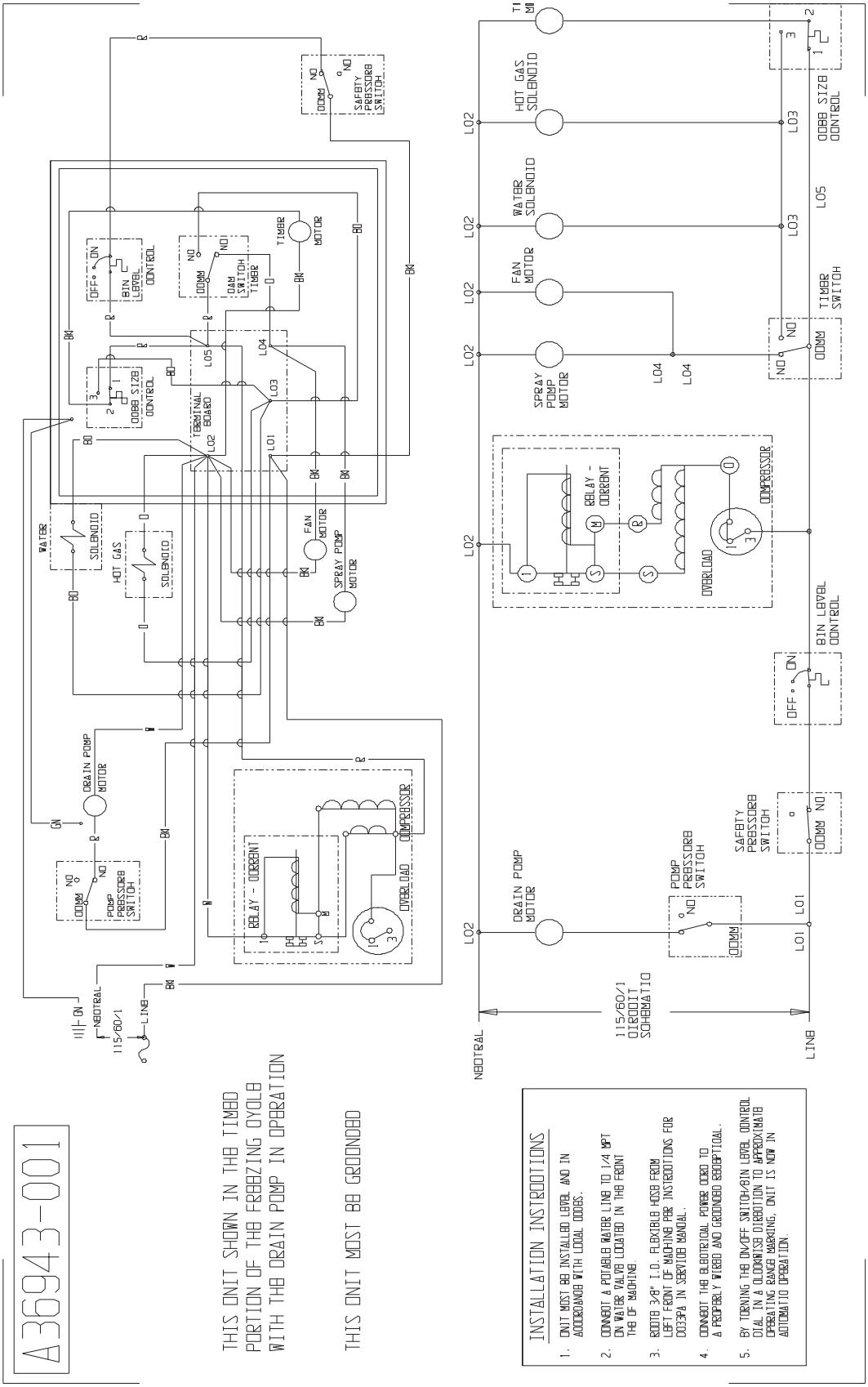

DCE33 SERVICE PARTS

Gravity Drain Model Wiring Diagram - Prior to August 2000

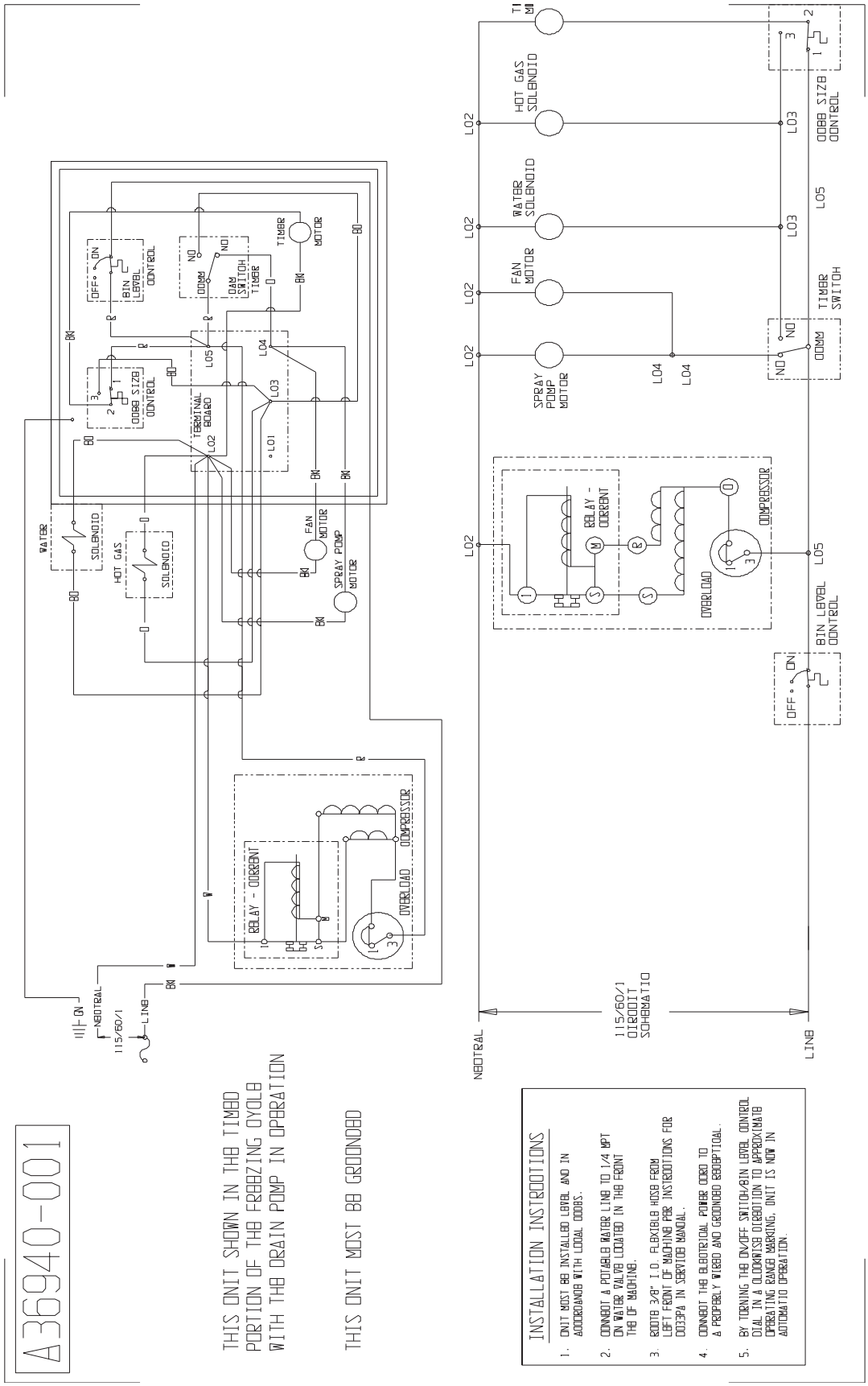

DCE33 SERVICE PARTS

Drain Pump Model Wiring Diagram after August 2000 up to D series

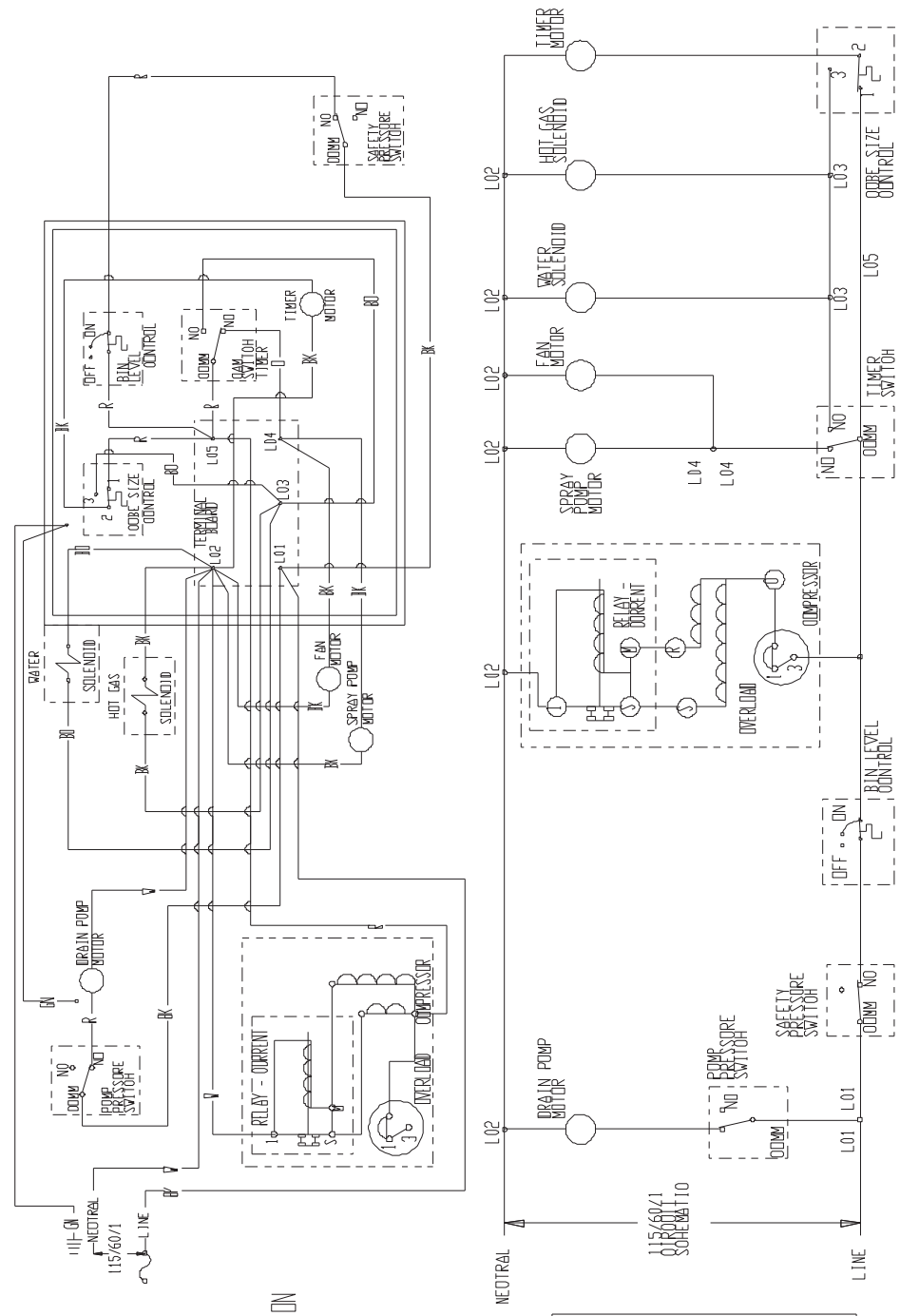

DCE33 SERVICE PARTS

Gravity Drain Model Wiring Diagram after August 2000 up to D series

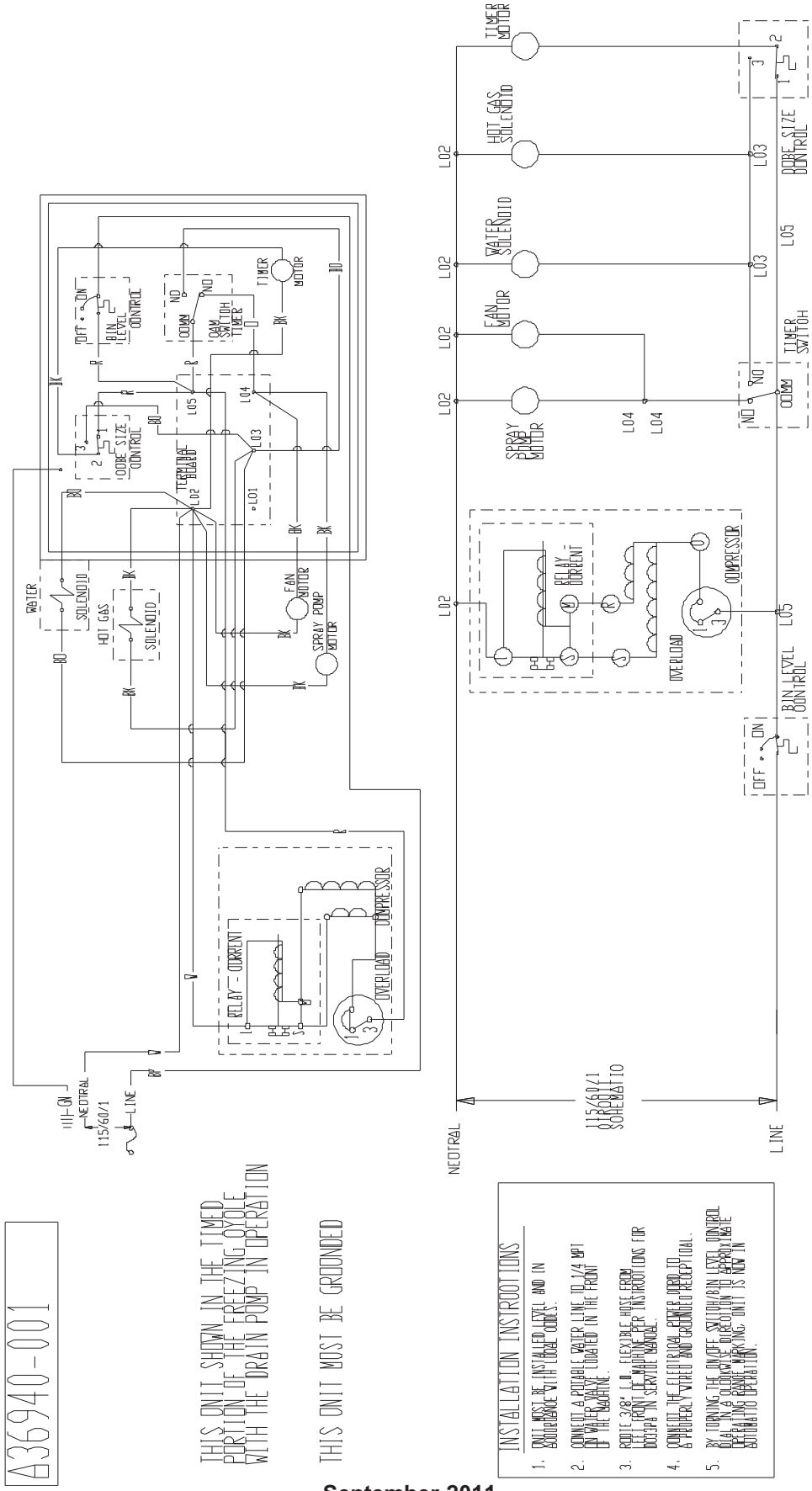

DCE33 SERVICE PARTS

Wiring Diagram for DCE33A-1BD, DCE33PA-1BD, DCE33A-1SSD or DCE33PA-1SSD

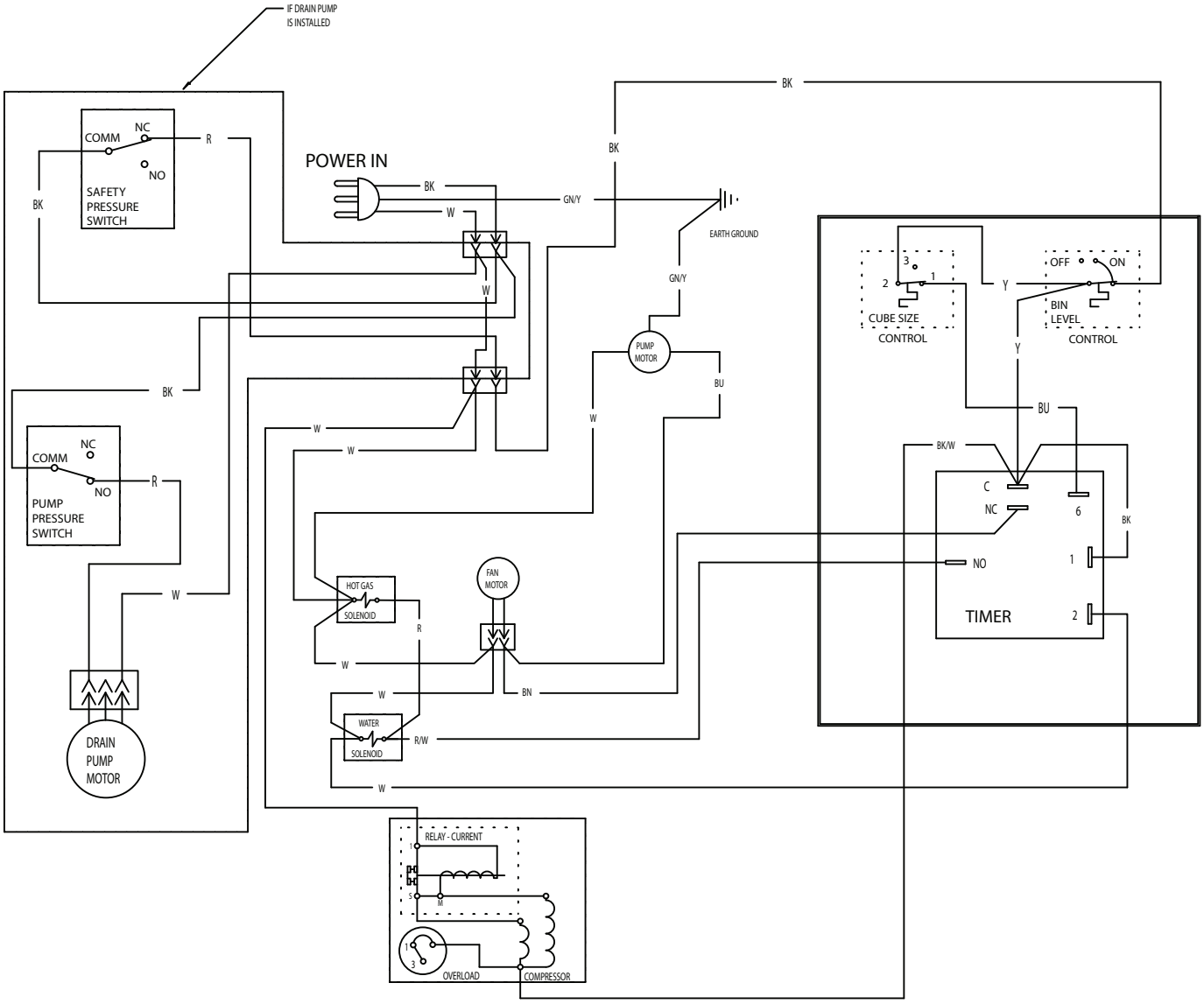

DCE33 SERVICE PARTS

Schematic Diagram DCE33A-1BD, DCE33PA-1BD, DCE33A-1SSD or DCE33PA-1SSD

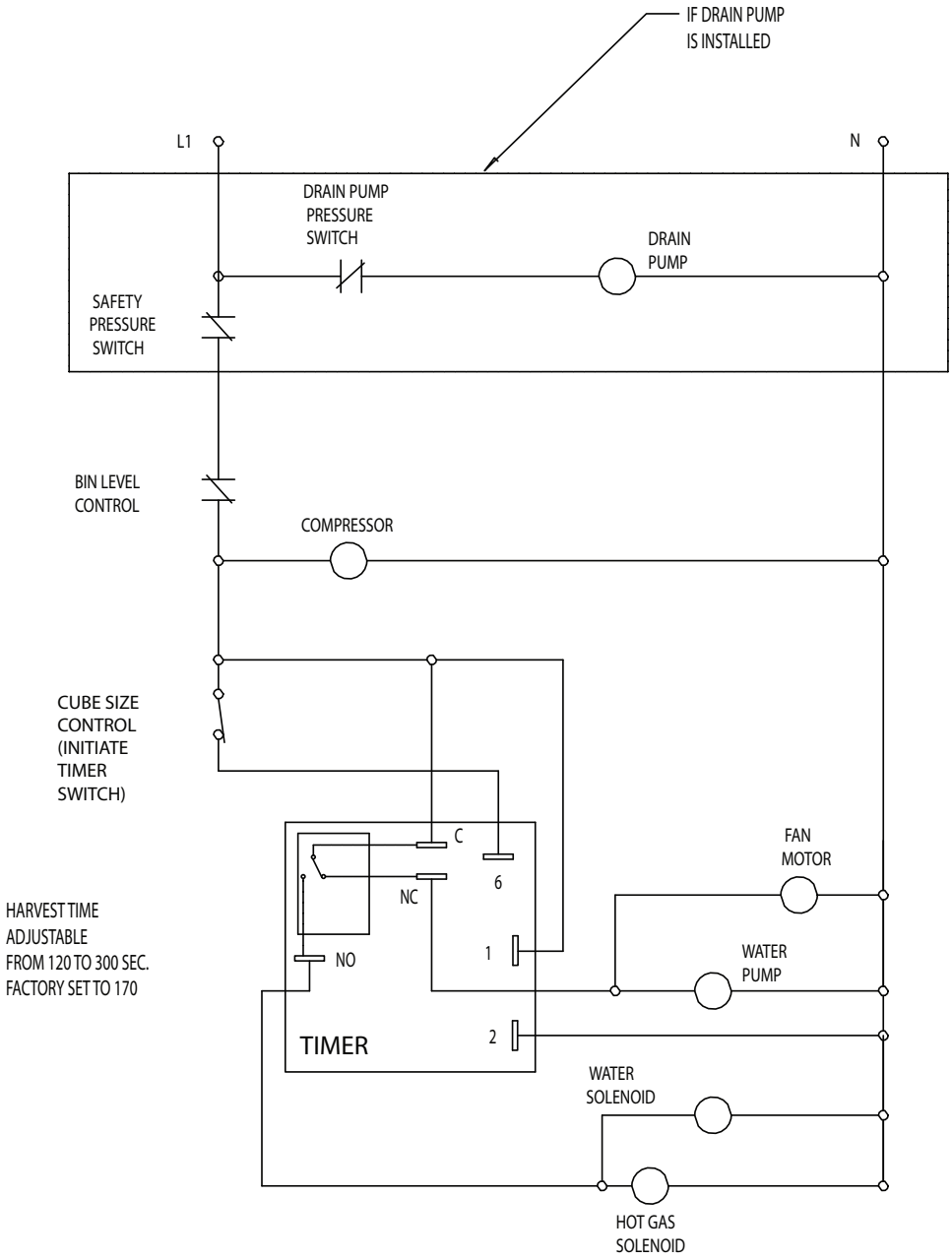

SWITCHES ON THIS UNIT
SHOWN IN TIMED PORTION
OF THE FREEZE CYCLE
WITH DRAIN PUMP IN OPERATION

SCOTSMAN ICE SYSTEMS

775 Corporate Woods Parkway

Vernon Hills, IL 60061

800-726-8762

www.scotsman-ice.com

17-2419-01 Rev A.

Commercial Kitchen Equipment Parts

Find more Scotsman equipment resources at

parthubz.com/equipment/scotsman

Need parts or service?

Call 833-700-8006

support@parthubz.com

parthubz.com