Commercial Kitchen Equipment Parts

SCOTSMAN HID312

Scotsman HID312 document

Provided by PartHubz

parthubz.com

833-700-8006 | support@parthubz.com

HID312 - Touch-Free Ice & Water Dispenser

Nugget Ice Machine / Dispenser

Sealed, maintenance-free bearings ensure maximum reliability and contribute to a long machine life

HID312A-1 with optional KLP24A legs

The Meridian® Difference

Sanitation:

- Touch-free, infrared dispensing of ice and water eliminates the need to physically touch the dispenser for more sanitary operation
- AgION® and other antimicrobial compounds are molded into key components to help inhibit the growth of microbes, bacteria, mold and algae
- Fully removable bin, spouts, air filter, sink, and grill allow for easy cleaning and maintenance
- Sealed refrigeration system minimizes outside airborne contamination
- Front accessible, removable air filter makes cleaning more convenient

Reliability & Ease of Use:

- Sealed, maintenance-free bearings reduce preventative maintenance and ensure maximum reliability
- Produces Scotsman's chewable H² Nugget Ice which is slow-melting and designed for reliable dispensing
- Space-maximizing design – the industry's smallest operational footprint relative to capacity, featuring specially designed contoured sides for enhanced breathability
- Unit-specific QR code for quick access to service manuals and warranty history
- Durable stainless-steel evaporator and exterior panels, plus larger sink opening and dispensing area
- Enhanced service features - Intuitive LED diagnostic lights reduce service time and convenient USB drive allows for fast software updates
- Industry-leading energy and water efficiency along with quieter operation

Touch-free infrared sensor dispensing option, providing more sanitary operation

User controlled antimicrobial push-button dispensing option, providing quick and efficient operation

24 Hour Volume Production

Air Cooled		
70˚F/21˚C 50˚F/10˚C	Air Water	90˚F/32˚C 70˚F/21˚C
260/118 lb/kg		225/102 lb/kg

Specifications

Model Number	Condenser Unit	Dispensing Method	Storage Capacity lb/kg	Basic Electrical Volts/Hz/Phase	Max. Fuse Size or HACR Circuit Breaker (amps)	Min. Circuit Amps	Energy Consumption kWh/100 lb 90˚F(32˚C)/70˚F(21˚C)	Water Usage Gallons/100 lb (liters/45.4 kg) Potable 90˚F(32˚C)	Condenser 70˚F(21˚C)
HID312A-1	Air	Touch-Free Sensor	12/5.4	115/60/1	15	Cord	4.90	12/45.5	-
HID312AB-1	Air	Button Activated	12/5.4	115/60/1	15	Cord	4.90	12/45.5	-
HID312AW-1*	Air	Touch-Free Sensor	12/5.4	115/60/1	15	Cord	4.90	12/45.5	-

*Wall mount configuration. Does not have or accept a drip tray. Unit designed to be installed over existing sink.

H² Nugget Ice

Chewable, slow-melting ice that allows for more reliable dispensing.

3/4" x 5/16" x 3/8"
(1.9 x 0.8 x 0.95 cm)

Certification

Warranty

- 3 years parts and labor.
- 5 years parts on the compressor and condenser.
- Warranty valid in North, South & Central America for commercial installations.
- Contact factory for warranty in other regions.
- Residential Applications: 1 year parts and labor

PURE WATER SYSTEMS

WWW.PWS-CHICAGOLAND.COM

135 E. St. Charles Road, Suite C2
Carol Stream, Illinois 60188
630-384-2000

HID312 - Touch-free Ice Machine / Dispenser

HID312 - Touch-Free Ice & Water Dispenser

Nugget Ice Machine / Dispenser

HID312 - Touch-free Ice Machine / Dispenser

Without Wall Mount: HID312A(B)

Installation Note: Allow 6" space at left, back and right side for ventilation and utility connections. All models include 7.5' power cord with NEMA 5-15P plug.

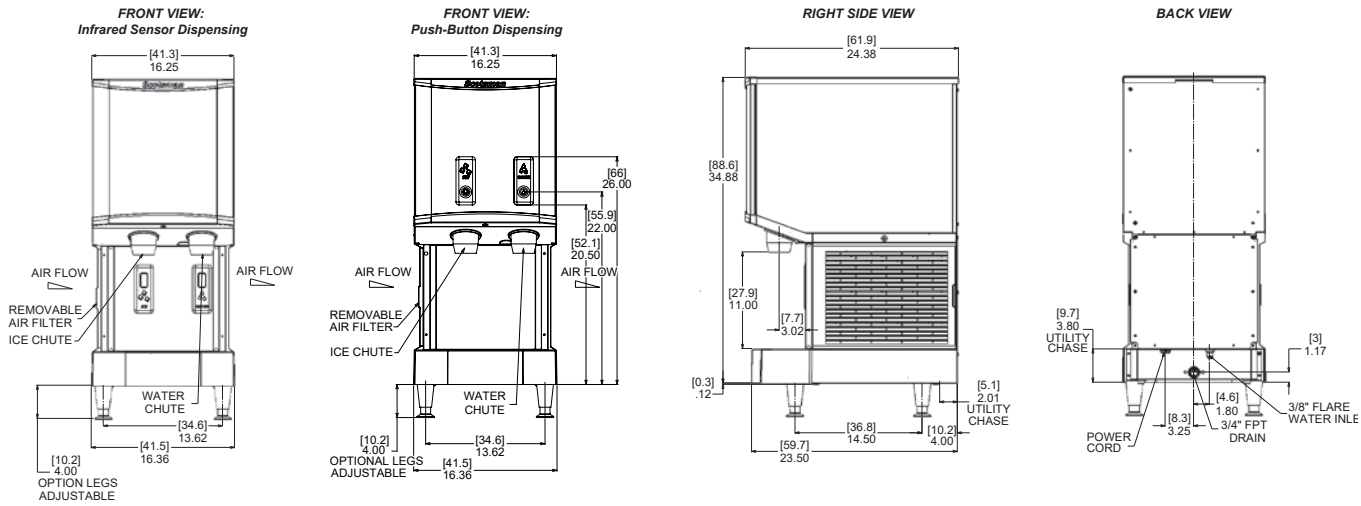

With Wall Mount: HID312AW

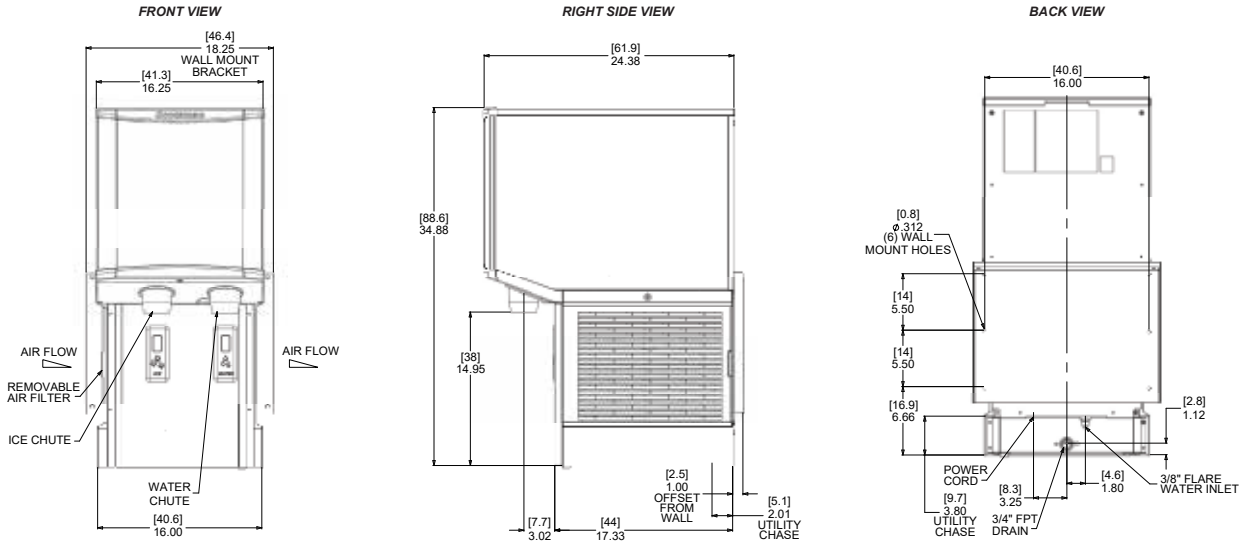

All Models

Dimensions (W x D x H):

Unit:
HID312A(B)-1: 16.25" x 24.38" x 35"
HID312AW-1: 18.25" x 24.38" x 35"

Shipping Carton:
HID312A(B)-1: 24.25" x 27.13" x 41.5"
HID312AW-1: 24.25" x 27.13" x 41.5"

Shipping Weight: HID312A(B)-1: 183 lb/ 83 kg
HID312AW-1: 188 lb/ 85 kg

BTUs per hour: 3,200

Refrigerant: R-134A

Accessories

Model Number	Description
KLP24A	4" Adjustable legs, box of 4, plastic with metallic foot.
HST16-A	Machine stand for HID312, with locking reversible door and shelf.
HST16B-A	Machine stand for HID312, basic version.

Scotsman recommends all ice machines have water filtration. See Scotsman water filter specification sheet for details.

Operating Requirements

	Minimum	Maximum
Air Temperatures	50°F (10°C)	100°F (38°C)
Water Temperatures	40°F (4.4°C)	100°F (38°C)
Potable Water Pressures	20 PSIG (1.4 bar)	80 PSIG (5.5 bar)
Electrical Voltage	-5%	+10%

Specifications and design are subject to change without notice.

PURE WATER SYSTEMS
WWW.PWS-CHICAGOLAND.COM
135 E. St. Charles Road, Suite C2
Carol Stream, Illinois 60188
630-384-2000

Commercial Kitchen Equipment Parts

Find more Scotsman equipment resources at

parthubz.com/equipment/scotsman

Need parts or service?

Call 833-700-8006

support@parthubz.com

parthubz.com